tessier

ADAPTIVE OUTDOOR SPORTS EQUIPMENT

snow'kart

User and Maintenance Manual



Snow'Kart manual version n°: MSK03-20261005

Design, manufacturing, commercialization & after-sale service

TESSIER
Parc Alpespace, 336 voie Thomas Edison, 73800 Sainte-Hélène-du-Lac, France
Tel. +33 (0) 479.83.51.52 – contact@tessier.sport

www.tessier.sport

Table of contents

1.	**GENERALITIES**	**3**
1.1	Information related to this manual	3
1.2	Symbols in this manual	3
1.3	Labelling	4
1.4	Intended use	5
2.	**PRESENTATION AND INSTRUCTION OF USE**	**6**
2.1	Presentation	6
2.2	Recommendations	7
2.3	The accompanying skier with the SNOW'KART	8
2.4	Skis choice	8
2.5	Bindings choice	8
2.6	Mounting of the bindings on the skis	8
3.	**USE OF CHAIRLIFTS AND DRAGLIFTS**	**9**
3.1	Draglifts use	9
3.2	Chairlift use	14
4.	**GLOBAL DESCRIPTION**	**17**
4.1	Global view of the SNOW'KART	17
4.2	Levers tips and Easydrive kit	20
5.	**TECHNICAL EXPLANATIONS, MANIPULATIONS AND SETTINGS**	**21**
5.1	Seats	21
5.2	Protection cover	22
5.3	Footrest	22
5.4	Manipulation of the ski position lock	22
5.5	Replacing the levers tips	23
5.6	Assistance bar	24
5.7	Adjusting the brake teeth	24
6.	**TECHNIC OF USE**	**25**
6.1	Advises for the accompanist	25
6.2	Skiing in SNOW'KART	25
6.3	Skiing in SNOW'KART with the Easydrive kit	26
7.	**MAINTENANCE**	**27**
8.	**DELIVERING AND TRANSPORTING**	**28**
9.	**RECYCLING**	**28**
10.	**CLEANING AND DISINFECTION**	**28**
11.	**WARRANTY**	**29**
12.	**VERTICAL EVACUATION OF TESSIER® SITSKI EQUIPMENT**	**30**

1. GENERALITIES

Information related to this manual

This Instruction and Maintenance manual owns all the important information about the use of your TESSIER™ product. In order to use it the safe way and enjoy all of its performances, please read carefully this manual and pay attention to the security advice and maintenance advice.
If you have visual disturbance, or for any other reason, you can ask us the .pdf version of the manual and zoom it according to your convenience.

1.2 Symbols in this manual

	**WARNING** Indicates a potentially hazardous situation that could result in serious injury if you do not respect the security checks mentioned.
	**CAUTION** Indicates a potentially hazardous situation that could result in minor or slight injury if you do not respect the security checks mentioned.
	**IMPORTANT** Indicates a potentially hazardous situation that could result in damage of equipment if you do not respect the security checks mentioned.
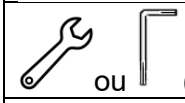 	MOUNTING AND SETTINGS INDICATIONS Indicates the key size (a) And the value of the torque – Nm (b) to correctly tighten the screws.
	GOOD MANIPULATION Indicates the processes to follow in order to operate correctly the manipulation.
	BAD MANIPULATION Indicates the processes not to follow, shows the wrong way to do the manipulation.

1.3 Labelling

A sticker and an aluminum plate are on your SNOW'KART.

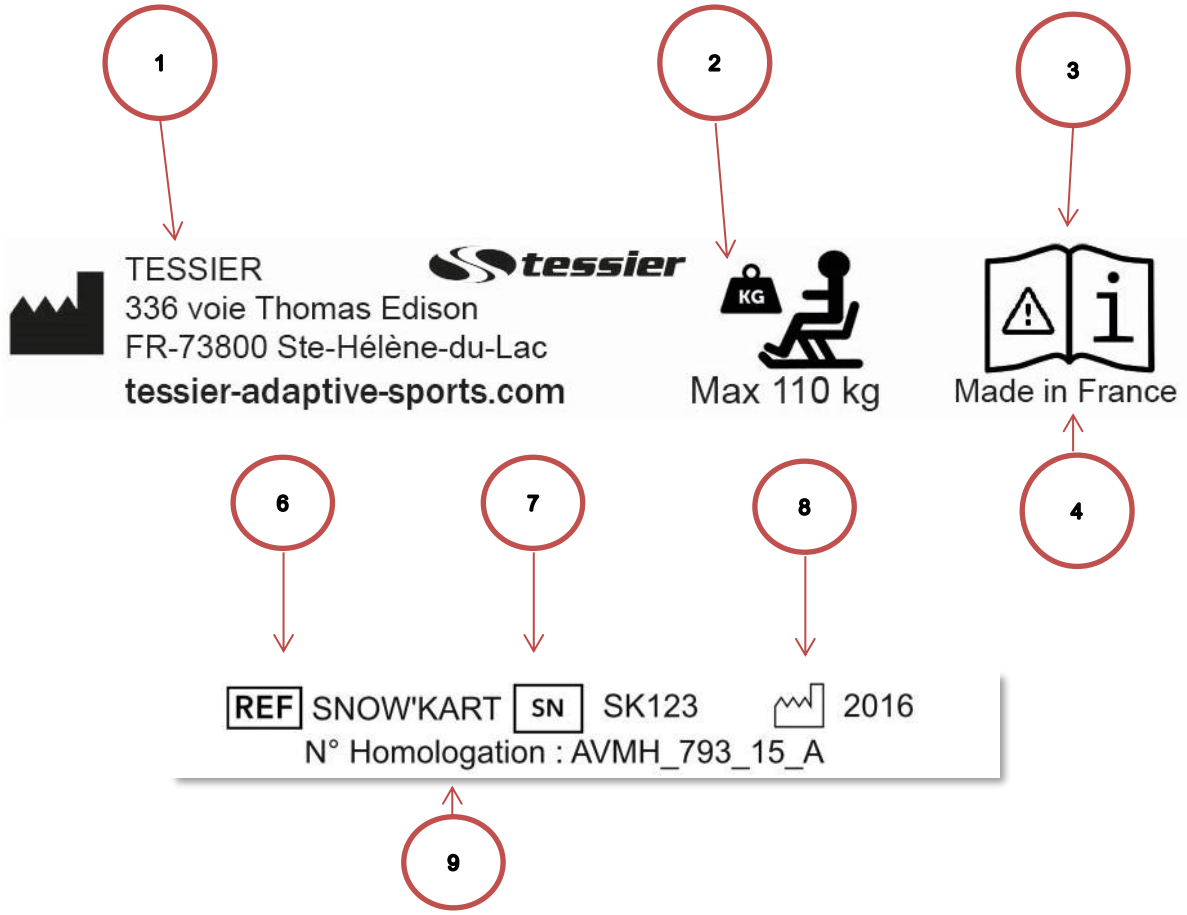

Référence	Désignation	Observations / Explications
1	Manufacturer	Complete name and address of the manufacturer
2	Maximal weight of the sitskier, DUO use	Weight (in kg) of the sitskier.
3	Manual	Refer to the manual to get all the information in order to use correctly your product.
4	CE Logo	This product conforms to the Requirements of Council Directive 93/42/EEC of class I.
5	Made in France	Country of production
6	Reference	Product reference for the manufacturer
7	Serial Number	Identification of the product via its serial number
8	Year of production	Year of production of the product
9	Homologation	Homologation number from STRMTG (see chapter 3)

1.4 Intended use

- The SNOW'KART is a ski frame designed for use in partial autonomy. The presence of an attendant is essential for the use of the ski lifts.

- The SNOW'KART is configurable and can be completed with accessories that allow to adjust the position and comfort of the user. The possible setting and the options are described later in this manual.

- The SNOW'KART has been designed in order to ski on marked slopes or off-piste accompanied by a qualified mountain professional and to take the ski lifts according to the homologation notice delivered by the "Service Technique des Remontées Mécaniques et des Transports Guidés" (STRMTG), division of the French Ministry of Transport, Equipment, Tourism and Sea.

- TESSIER® products can be used on a temperature range of -20 to +35 °C. While using the equipment out of this range, pay closer attention to the elements during the check-up phase.

- Anyone using TESSIER® products must be properly supported in the seat. Our 7 sizes (children and size 1 to 6) cover most morphologies. The minimal recommended age is 5 years old for the passenger and 16 for the pilot in DUO, and 10 years old in SOLO, provided that the child is comfortably installed in the seat while being well supported.

- Skiing and mountaineering environment in general can be potentially dangerous. Be sure to master and control your SNOW'KART, responsible of your speed and aware of the risks you take. Respect the security notices, the specific ski resort regulations and the general mountaineering laws.

2. PRESENTATION AND INSTRUCTION OF USE

2.1 Presentation

The SNOW'KART has been design to people who want to ski independently, have the use of their upper limbs but not enough strength, coordination, or balance to ski in Uniski or Dualski.

The SNOW'KART replaced the Kartski from the season 2015 – 2016.

The main improvements compared to the Kartski are:

- **Easier chairlift use** thanks to a locking system in high position, and a standardization of the lifting mechanism with the Tandem'Flex™ and the Tempo™ so that users find similar functions an all TESSIER® sitskis.

- **Easier, smoother, more stable and more efficient** thanks to the modification of the edging angle, new weight distribution and more efficient brake system.

- **More versatile** thanks to the interchangeable levers allowing the SNOW'KART to be easily adapted to children and one-handed users.

- **More compact for transport** thanks to the removable assistance bar.



Full independence with a person with Cerebral Palsy.
equipped here with an articulated bucket seat.



With the assistance of an accompanist

In France, the SNOW'KART received the approval N° AVMH_793_15_A delivered by "the commission of the sitski equipment", presided by the STRMTG (French Ministry of Transport).

2.2 Recommendations

➢ The performance and security of the SNOW'KART depend on its condition. It is thus important to look after it correctly and pay attention to the following points:

- Pay attention to your equipment and be attentive to any dysfunction to remedy it rapidly.
- Respect the original assembly of the parts during reparation. If needed, do not hesitate to contact us.
- Check your skis condition and make them checked by a professional if needed.

➢ The skier's safety depends on his/her training level, his/her caution and his/her protection. It is therefore important to respect these different points:

- We strongly recommend learning with an instructor who knows the equipment well. The difficulty of slopes and ski lifts used must be chosen according to the skier's ability in the SNOW'KART and the ability of his/her guide.
- Keep a safety margin so as to always control your speed and avoid collisions with obstacle or other users of the slope.
- Stay focused while using ski lifts.
- Wearing your helmet is essential.
- Respect the 10 FIS rules of skier behavior (available online).

➢ To limit the risks linked to skiing, it is also necessary to respect the following advises:

- Sufficient functionality of the upper limbs is required, in order to be able to ski independently. A contraindication is in force, concerning people with cognitive problems, shoulder or back problems. The condition of the skier's upper limbs must be good enough not to limit the skier's movements.
- In order to avoid any irritation, users must be properly dressed to avoid direct contact with the equipment. Skiers must wear mountain boots to protect themself against cold and shocks. This is particularly important for people who do not have sensitivity of all their limbs.

This manual is not intended to teach you ski technique, but to explain the operation, settings, and the maintenance of your equipment.

2.3 The accompanying skier with the SNOW'KART

The sitskier in the SNOW'KART must always be accompanied by an accompanying skier. It is essential, especially during the learning process, that the accompanying skier is linked to the SNOW'KART by the lifeline attached to his waist. The accompanying skier must have a very good level of skiing. When the sitskier has a good command of the SNOW'KART, and if the slope allows it, the accompanying skier can detach the lifeline. When taking the chairlift, the accompanying must detach the lifeline and roll it around the assistance bar. The accompanying is always indispensable while using the chairlifts or to move the SNOW'KART on flat grounds.

Attention	**CAUTON** It is imperative that the rope does not drag, so as it does not get stuck in the chairlift seat.

2.4 Skis choice

Recommended length: between 155 cm and 175 cm.

2.5 Bindings choice

The maximum adjustment force to be uses depends on the weight and the level of the skier. The bindings must not release. For all uses, it is recommended to tighten the maximum release force.



- « standard » bindings: minimum adjustment of 14 DIN.
- « pivot » type bindings: minimum adjustment of 12DIN. (This type of bindings withstands punctual overloads well).



It is imperative to keep the anti-release plates in the front of the foot piece because the efforts on the front of the binding are important.

Avertissement	**WARNING** It is essential to use bindings strong enough tighten to the maximum and properly adjusted by a professional.

2.6 Mounting of the bindings on the skis

The length of the foot piece is **325 mm**.
The mounting is done as a normal boot of the same length: the middle of the foot piece has to be centered with the ski mark.

Attention	**CAUTION** We advise not to remove the anti-skid tab and to contact us if it does not fit your bindings.

3. USE OF CHAIRLIFTS AND DRAGLIFTS

The SNOW'KART received the homologation notice N° AVMH_793_15_A for the use of chairlifts and draglifts. The "TESSIER drag lift system" has received the homologation notice N° AVMH 734_99_C. These notices are delivered by the "sitski equipment commission" presided by the STRMTG (division of the French Ministry of Transport, Equipment, Tourism and Sea). They are available on request to TESSIER.
Also, the French Handisport Fédération has drawn up regulations for the practice of sitskiing.

Those following practical advises does not replae the homologation notice.

	**WARNING** Never use a ski lift without authorization of its operator.

3.1 Draglifts use

3.1.1 Ski lift harness description

Since 2012, TESSIER offers **3 types of ski lift harness**:

- The **« standard » harness** for draglifts with « plate ».
  It is also usable for draglifts with « T-bars ».
- The **« T-bar » harness**, easier, for bows.
  It is homologated in France only for bows and **is not allowed on draglifts with plates**.
- Le **« T-bar + flange » harness** for all types of draglifts.

	**WARNING** A helper must be before the sitskier, and ready to push the emergency stop button in the arriving area in the case of a dysfunction of the harness. This is a condition for the homologation to be valid.
	**WARNING** Never lock the "Inclination blocking system of the right ski" (symbol 11 – page 19). This system is only made for the use of the chairlifts.

Using the ski lift harnesses

The concept is the same for the three harnesses:
- A main release of the harness: traction of the main rope releases the snap hook which release the flange or the strap (in function of the harness).
- A **safety release**: traction of the rope held on the other hand leads to the release of the harness. This release is used in the case of a dysfunction of the main release, loose of the rope or any other case.
- Respect the general advising of the following pages.

Installing the ski lift harness on the SNOW'KART

The fixation is the same for the three harnesses.

1- Fix the 2 snap hook (1) to the fixing points on the frame (2). It is necessary to remove a snap hook to take place in the seat.

2- Take care that the rope (3) of the harness must always pass between the seat and the strap of the backrest (4).

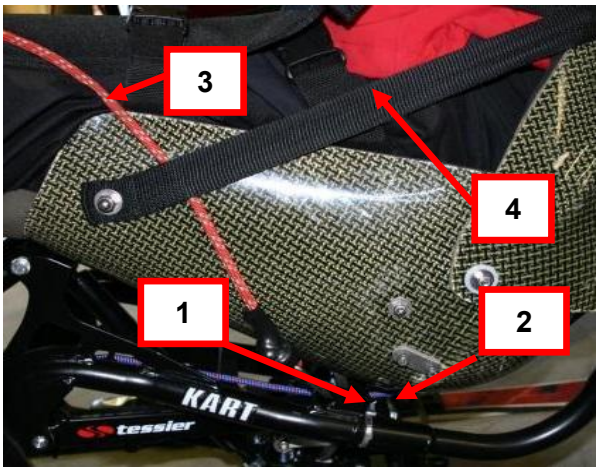

➢ **Explanations with the descriptive on the following page**

« Standard » ski lift harness

The main release rope (4) allows opening the flange (1) and releases the seat of the pole. **It must not be attached to the hand but simply held between the hand and the handle of the lever** because it goes with the flange when releasing the safety snap hook.
The safety snap hook rope (5) must be passed around the wrist and held on the handle of the outrigger as a strap.

Flange + T-bar ski lift harness



The use is similar to the « standard » harness.
The main release rope (4) allows opening the flange (1) and releases the seat of the pole. It must not be attached to the hand but simply held between the hand and the handle of the outrigger because it goes with the flange when releasing the safety snap hook.
The safety snap hook rope (5) is used in this configuration as a security release. In this case, one of the ropes is not used, and must be stowed on the side of the seat. In the case of a release, the hook of the rope will go through the hanging hook (1C) of the flange. (see picture on the right).

T-bar ski lift harness

The rope (2) goes from any side of the T-bar, closer to the pole. The releasing ropes are held as poles straps on each hand (5) (6). The other rope (6) is used as security release.

Standard harness

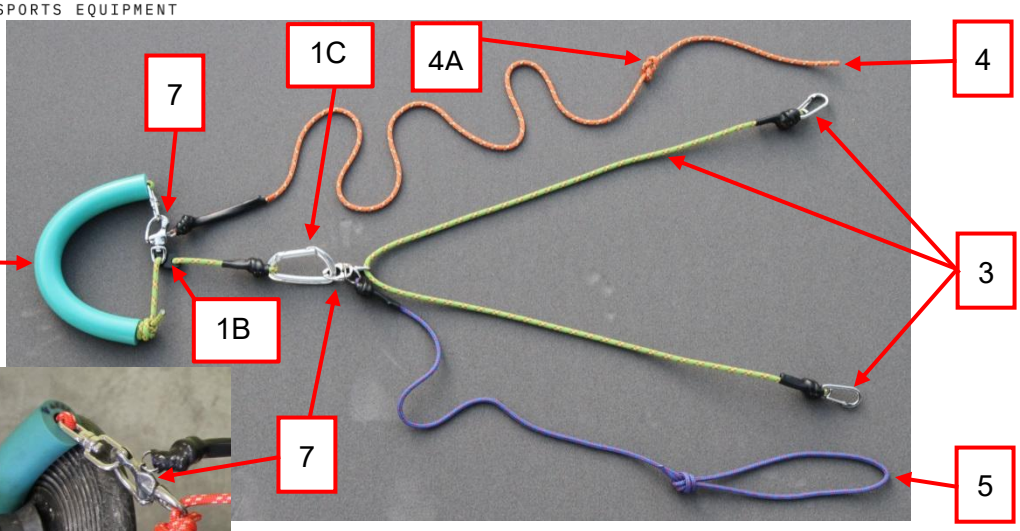

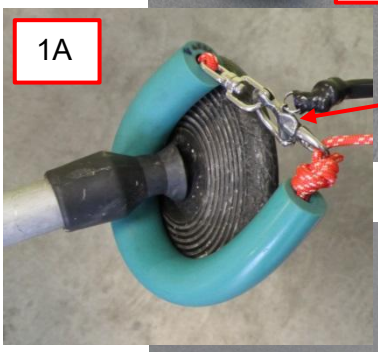

T-bar + rubber part draglift harness

Flange + T-bar harness

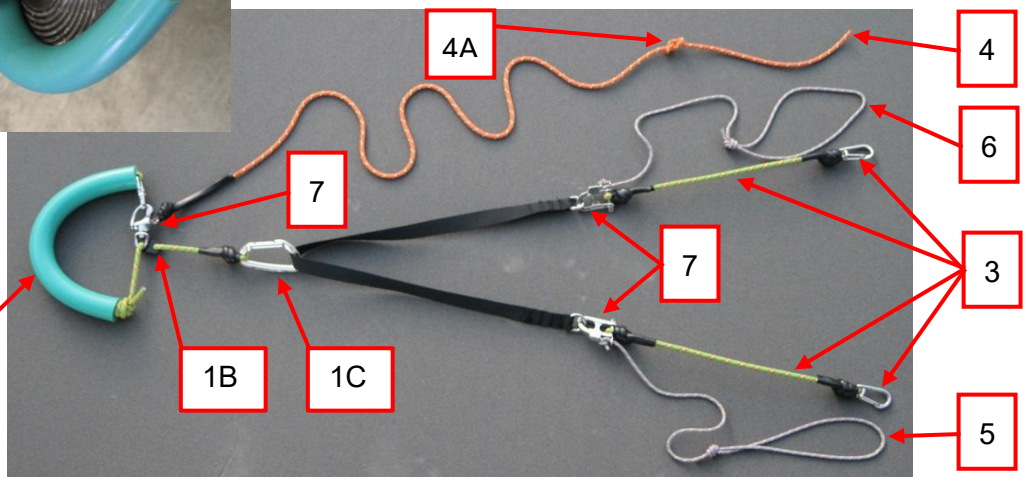

T-bar drag

T-bar harness

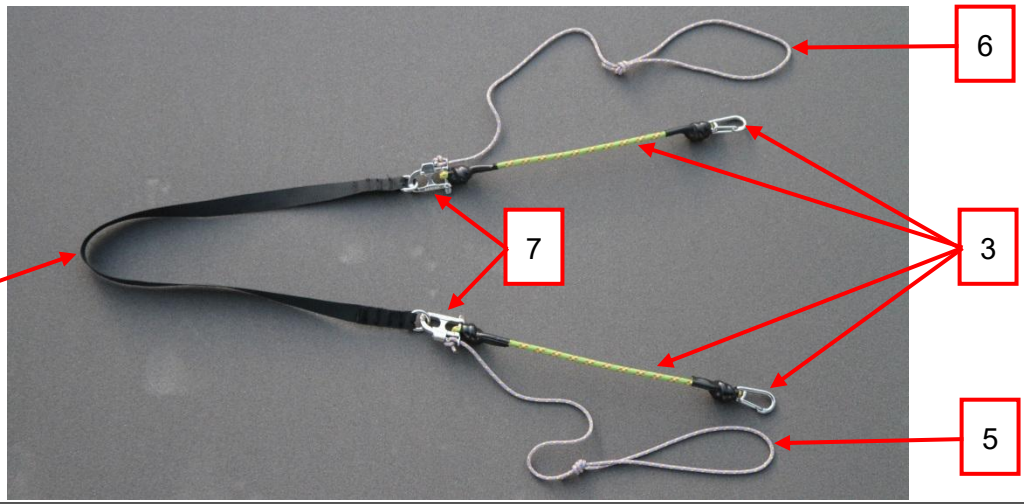

1 – Flange (rubber part). The « slipknot » allows a good maintain on the skilifts with plate. **1A** – illustration with « slipknot » tighten on the plate. **1B** – Plastic adjuster for the opening of the flange. **1C** – Hanging hook of the flange.
2 – Rope for easy and efficient hanging on the chairlifts with T-bars. **Do not use with plates**. The flange can be added to this rope (flange + T-bar harness).
3 – Snap hook and rope to attach the harness to the frame.
4 – Main release string. **4A** – knot, must be under the hand when holding the string.
5 – Safety release rope. Hold it by the buckle on the handle as a ski pole strap.
6 – Main release rope for the T-bar harness. **For the flange + T-bar harness,** the rope (**6**) is not used and must be hidden between the legs.
7 – Release karabiner and security release karabiner.

➢ **Specificities of the Duo ski lift harness**



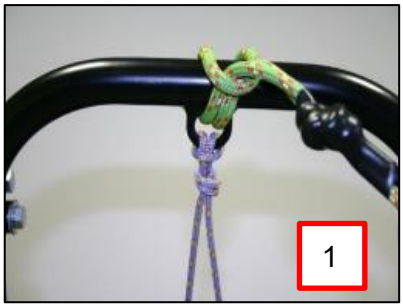





The functioning is the same as on a standard harness. The release rope (1) is tied to the safety line hook. The rope goes through the supports of the piloting bar (2). In order to release the harness, you have to pull on one of both ropes to open the snap hook, which will release the rope tied to the T-bar. As for a standard harness, one of the ropes is used as the main release rope and the second one is used as a safety rope.

Attention	**CAUTION** Refer to chapter 3.1 to know how to use the harness. The same advises as a SOLO use are applicable.

3.1.2 Method for draglift use



➢ **General case:**

- The sitskier must have the identification sheet of the ski lift harness with him to attest of its conformity.
- It is **compulsory that a helper leaves first and is at the emergency button at the arrival area of the ski lift**, in the event of a malfunction of the harness system. This is a condition of the authorization's validity.

Avertissement	**WARNING** First the sitskier or his accompanist opens the safety brake system placed under the SNOW'KART to make it operational and check that it works

➢ **For "standard" or « T-bar + rubber part » draglift harnesses:**

- The skier must **have prepared his/her harness before arriving in front of the ski-lift operator**. The rubber ring of the harness must be closed. A plastic adjuster is used to set the flange. It must be as closed as possible and just let plate of the ski lift goes through.

- The ski-lift operator must use the manual starting mode or stop the ski lift if it is not able to go slowly.
- He inserts the plate through the flange.
- When starting, the **lift operator must place the flange on the plate and maintain the plate on the front of the flange.** This will allow a good functioning of the slipknot of the harness.
- On ski lifts equipped with a T-bar instead of the plate, pass the flange on one or the other side of the T-bar and place it near the center of the pole.
- The rope of the release karabiner must not be tightening to the hand but simply held between the hand and the handle of the outrigger because it goes out the flange in case of releasing the safety karabiner.
- The rope of the safety karabiner must go around the wrist and held on the handle of the outrigger, as a simple ski pole strap.
- With the harness « flange + T-bar », there are 2 security ropes, one is not used and must be stored between the legs or inside the leg cover.
- When arriving, the sitskier releases the harness by the main release (opening the flange) as soon as he gets into the unloading area and leaves as fast as possible to be safe and store his harness.

- **For « T-bar » draglift harness:**

- The rubber part is not used; the rope is enough.
- The skier must **prepare his harness before arriving in front of the lift operator**.
- The 2 release ropes of each karabiner must go around the wrists and held on the SNOW'KART grips as ski pole straps.
- It's not necessary to stop the ski lift; the operator must place the rope on one or the other sides of the T-bar and place it near the center of the pole.
- When arriving, the sitskier releases his harness by one of the two ropes as soon as he gets in the arriving area and leaves it as fast as possible to store his harness.

Safety anti reverse brake

For more safety, a non-return brake allows to stop the SNOW'KART on the ascent slope of the ski lift in case of untimely release of the draglift harness.
This brake must be active when using a ski lift and can be deactivated by locking it with a beta pin when the ski lift is not in use.



Pin for locking/unlocking the anti-reverse safety brake

Avertissement	**WARNING** Beforehand, the sitskier or his accompanist unplugs the non-return brake placed under the SNOW'KART to make it functional and check that it is working properly.

3.2 Chairlift use

Compared to the KARTSKI, the addition of a locking mechanism in high position on the SNOW'KART makes easier the chairlifts use.

Those following directions for use are not a substitute for the homologation notice:

- Before taking the chairlift, **inform the chairlift operators of your presence**. They will be vigilant and will use the emergency button in the event of an incident.

- Systematically ask to get on at a slow speed, even requesting that it stops if the chairlift only has 2 places or is unable to go slowly. The speed for unloading the chairlift mustn't be higher than the speed for loading.

- Before getting ready to load, **unlock the frame** to put it in high position.

- **Lock the right ski** in order to avoid it to lean during the rise. The accompanist is on the left, so he has no access to this lever during the rise.

	**IMPORTANT** In this locked position, an effort on the lever (a fall for example) could twist it. Caution to unlock it before going back to the slopes.
	**WARNING** Reminder: Never use this system when taking the ski lift.



Locking system of the right ski: Free ski (left picture), locked ski (right picture)

- **Release the backrest strap** of the SNOW'KART in order to keep a comfortable and safe seating on the chairlift.

- The skier accompanist is installed on the left of the SNOW'KART and could hold the left grip to direct the equipment.

- If the Easydrive kit is used, disconnect the link bar in 2 parts to allow raising the frame and avoiding to the skier to be stuck by it.

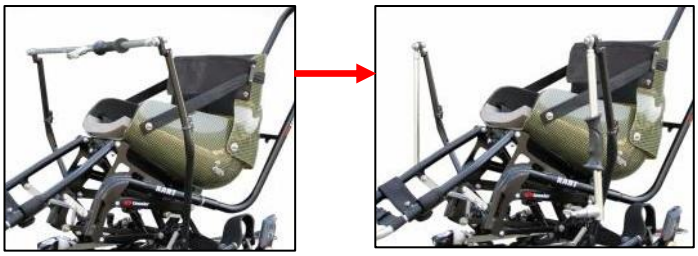

Avertissement	**WARNING** Forgetting one of those 3 steps can lead to harmful situation. Check absolutely before going in the embarkation area: ○ The right ski must be locked. ○ The frame must be unlocked. ○ The backrest adjustment strap must be loosen.

- To get in the seat, place yourself as indicated:
  - For a chairlift with 2 places: on one of the 2 places.
  - For a chairlift with 3 places: on the middle place.
  - For a chairlift with 4 places or more: on one of the middle places. The footrest bars of the restraining bar are mainly positioned every 2 places. In any case, do not positioned the SNOW'KART between 2 places where the footrests of the restraining bar are likely to obstruct. This should be imperatively entirely folded down.

➢ The accompanist raises the SNOW'KART, helped by the assistance gas jack and eventually by the sitskier who pushes on the grips.

➢ When the SNOW'KART is in the up position, pull on the locking rope and let the frame goes down on the blocking while keeping the rope pulled. Once locked, release the rope. This will keep the SNOW'KART balanced while waiting for the chairlift.




Locking system in high position common to the SNOW'KART*, TANDEM'FLEX® and TEMPO®*

➢ When the SNOW'KART makes contact with the bench of the chairlift, pull the assistance bar slightly forward from above to unlock the lock.



Loading in the locked high position

	**CAUTION** It is essential to release the locking system before sitting the SNOW'KART on the chairlift seat by leaving it in the high position.

- Loading by **sliding the SNOW'KART as far back as possible on the seat** when the chairlift carries the SNOW'KART away. To facilitate this maneuver, make a right-left translation movement with the right hand on the assistance bar and the left hand on the front of the seat.

	**WARNING** Always make sure that the SNOW'KART is sitting as far back as possible on the chairlift seat.

- Close the restraining bar immediately on leaving the station.
- Before arriving, check that the restraining bar could be raised without any obstruction.
- Raise the restraining bar just before unloading.
- The accompanist pushes the SNOW'KART out of the chairlift with his back pressed against the chairlift backrest, then gets up and quickly relaese the SNOW'KART from the arrival area.
- Before returning to slopes, remember to **lock the frame in the ski position, unlock the right ski and tighten the backrest adjustement strap**.

	**CAUTION** Before returning to slopes, make sure that: o The right ski is unlocked. o The frame is locked. o The backrest adjustment strap is tightened.

	**IMPORTANT** Control that no parts protrude from the frame under the seat so as not to damage the chairlifts during use.

4. GLOBAL DESCRIPTION

4.1 Global view of the SNOW'KART

Global view of the SNOW'KART

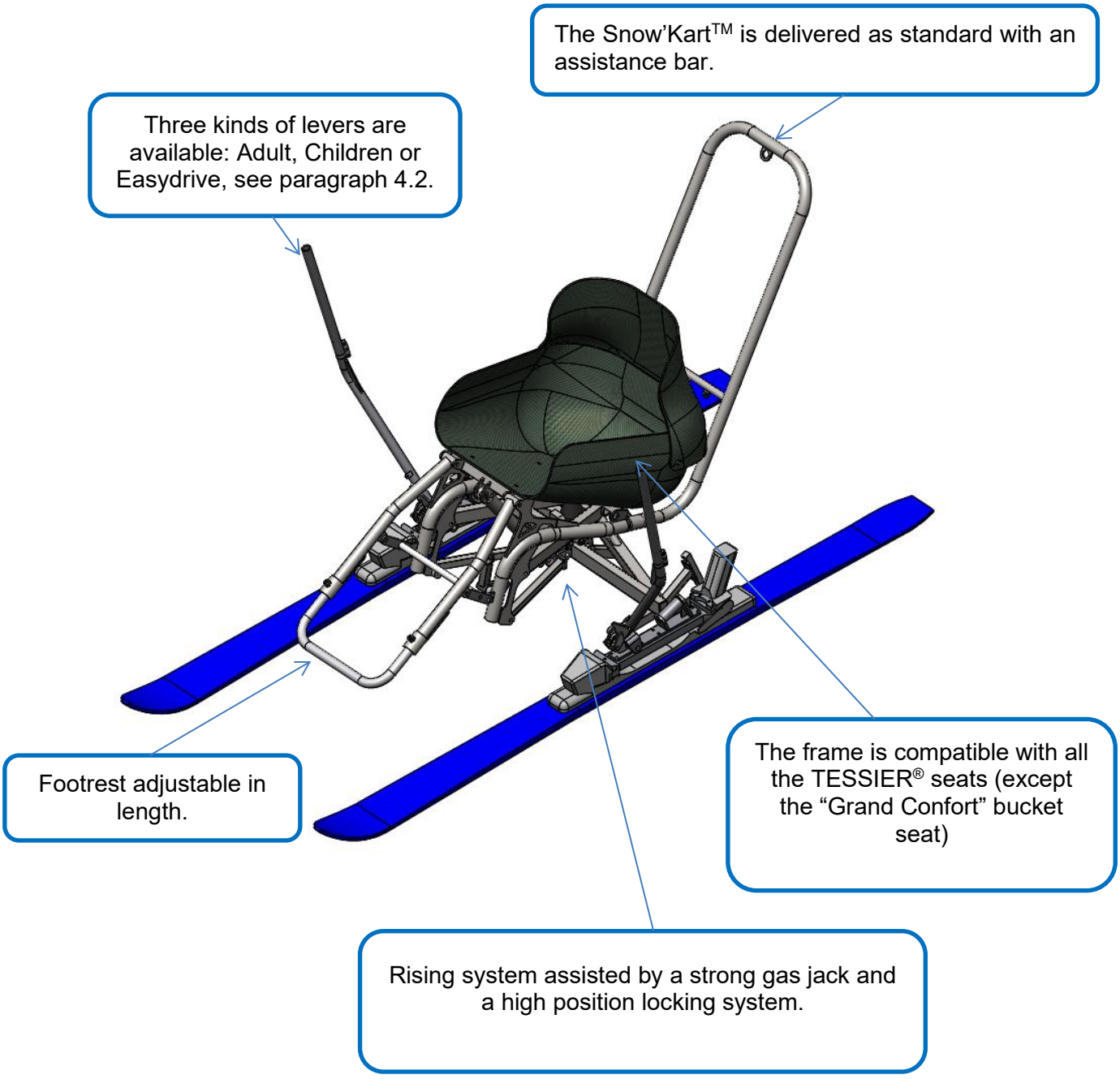

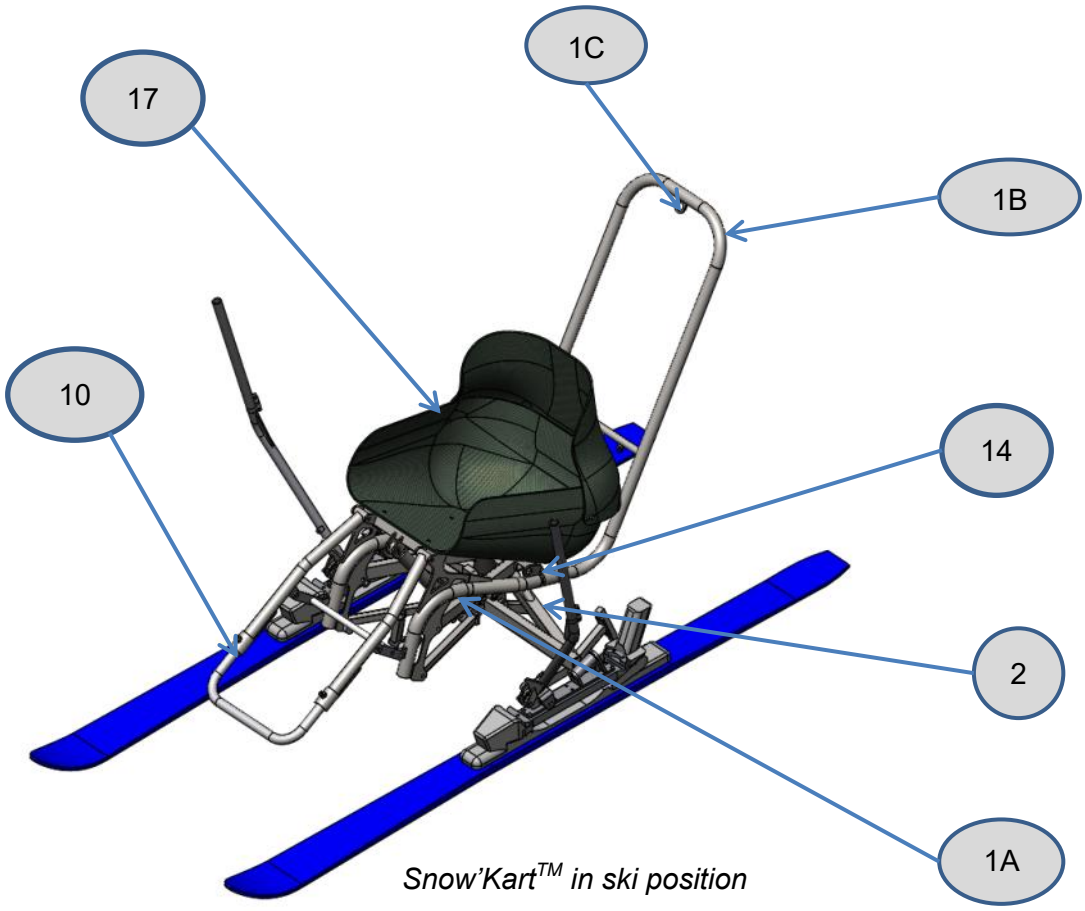

Snow'Kart™ in ski position

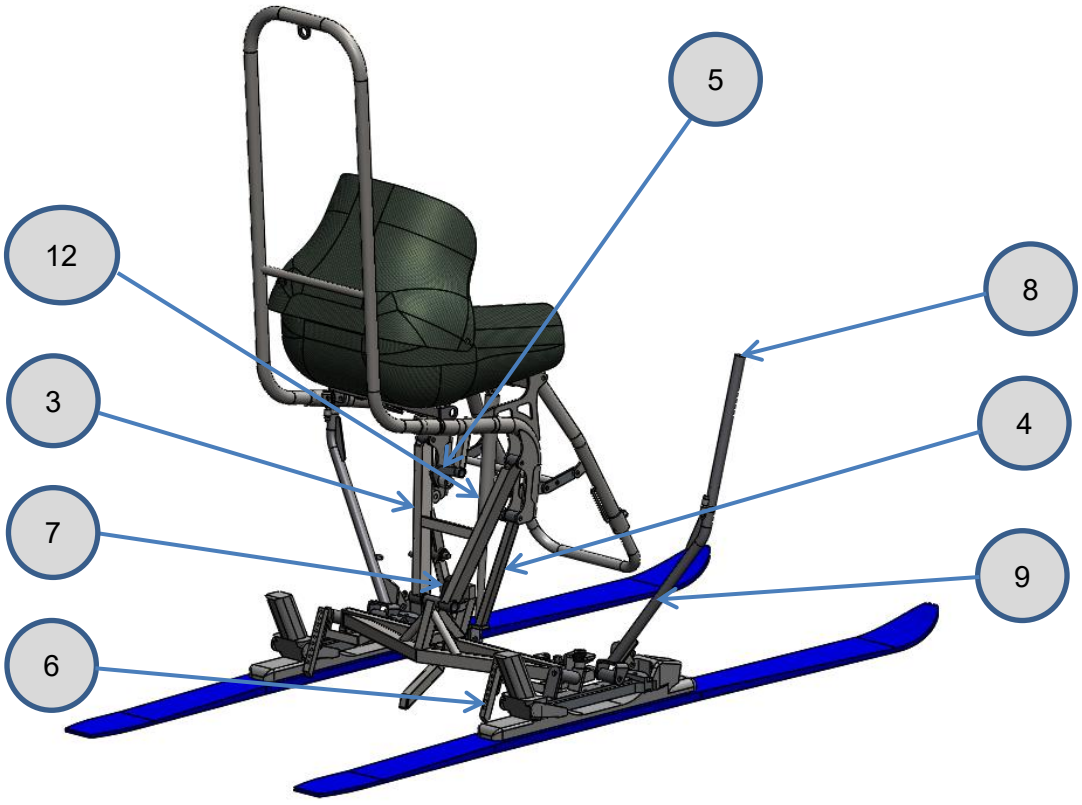

Snow'Kart™ in chairlift position

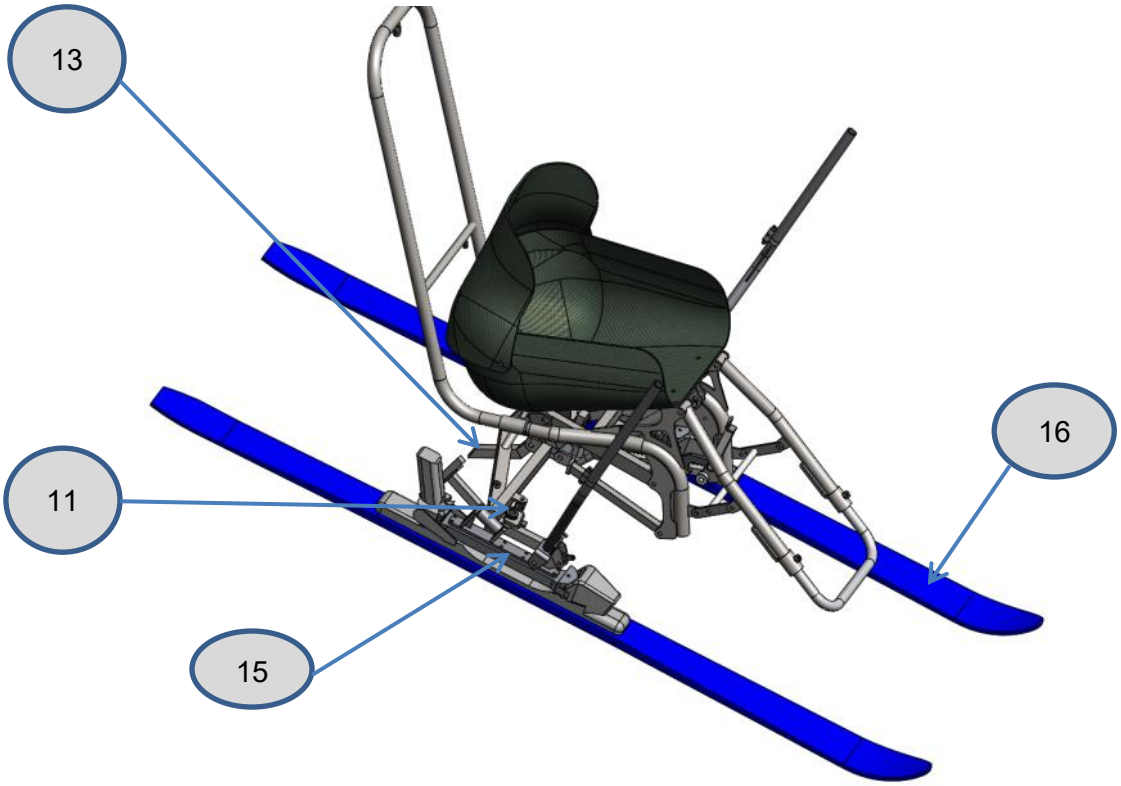

Symbol	Designation	Quantity
1A	Upper frame	1
1B	Assistance bar	1
1C	Hook attachment of the safety leash (welded on the assistance bar)	1
2	Lower frame	1
3	Upper arm	1
4	Lower arm	2
5	Lock for chairlifts use	1
6	Tooth brake	2
7	Rubber cushion for shocks absorption	1
8	Lever nozzle	2
9	Lever	2
10	Footrest	1
11	Inclination blocking system of the right ski	1
12	Helping gas jack for the rise at chairlift	1
13	Anti-reverse brake	1
14	Hook attachment of the draglift harness (welded on the upper frame)	2
15	Aluminum clog part	2
16	Standard ski + binding	2
17	Seat in composite materials	1

Nomenclature of the main parts of the SNOW'KART

4.2 Levers tips and Easydrive kit

Three options are available and easily interchangeable:

		
Adults levers	*Easydrive kit (option)*	*Children levers (option)*
Mounted as standard on the SNOW'KART.	Allow the SNOW'KART to be piloted with one hand. Adjustment on 3 positions to adapt the angle of the snowplow skis in relation to the slope steepness. The adjustment is done with a locker. To allow the rising of the restraining bar, the bar could be disconnected in 2 parts.	Thanks to their curved shape, they reduce the distance between the hands for smaller people. Two orientations are possible, inward or backward (see chapter 5.5)

Different options available on the SNOW'KART

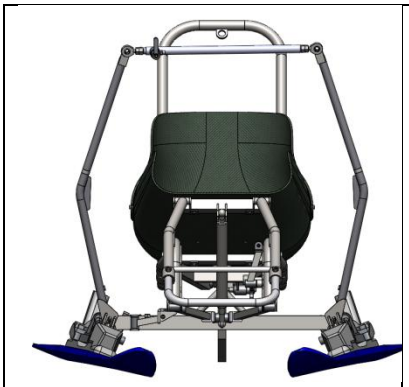	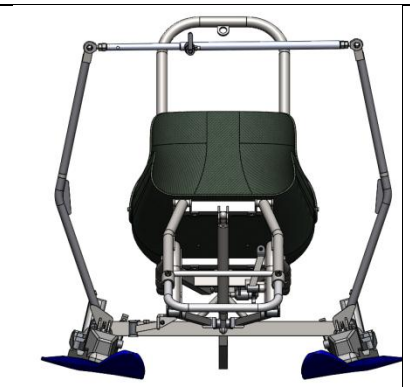	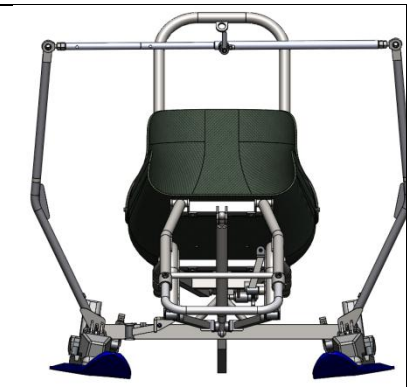
Tightest setting	*Intermediate setting*	*Widest setting*

Easydrive kit configurations



5. TECHNICAL EXPLANATIONS, MANIPULATIONS AND SETTINGS

5.1 Seats

The following TESSIER® seats are compatibles with the SNOW'KART:

	
Articulated seat Children size to size 6 (7 sizes) Different backrest widths and heights are available to be adapt to the skier's morphology and disability.	**Articulated bucket seat** Unique size (equivalent to size 5)

The seats are equipped with 2 type of foam:

- Full waterproof foam glued on the edge of the seat and in the backrest.
- At the bottom of the seat, a removable and comfortable memory shape foam that hardens in the cold but will soften and take the shape of the skiers with the body temperature. It could be compressed into the seat but will take its original shape if it is removed to keep it warm. It may be necessary be to remove it to dry it.

Assembly of the seat on the frame
Screw it tight (18Nm)

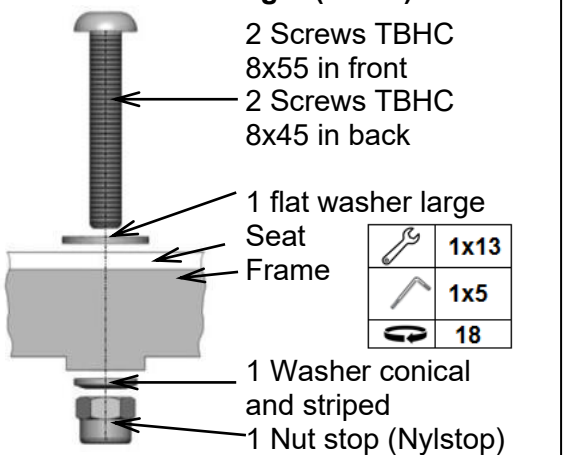

At the installation, tighten correctly all the straps. The hips straps pass under the jacket's padding to be efficient. For the articulated bucket seat, tighten first the horizontal straps then the shoulder straps. Make sure that the cushion is always present and in good condition before settling down or installing the seated skier.

	**CAUTION** When manipulating the articulated seats, do not put your fingers between the seat and the backrest, risk of pinching.
	**CAUTION** The seats are not fire resistant. In case of fire (incandescent cigarette butt for instance), get out of the seat as fast as possible.

5.2 Protection cover



The leg cover is the most commonly used with the SNOW'KART. It is one size fits all. It protects from wind and snow projection. Its wide pocket allows storing the draglift system for example.
It is fixed:

- In the center, with 2 Velcro straps that go behind the footrest tubes.
- At the top, by the seat strap above the knees.
- At the bottom, by the foot strap.

It is also possible to use the UTY warm cover (one size).

Important	**IMPORTANT** Do not use solvents to clean the covers. Refer to chapter 9.

5.3 Footrest

	13
	10

1) **Height adjustment**: with a 13 spanner, loosen the 2 screws (**A**) and adjust the height to get a space of one finger between the foam of the seat and the thigh in the front of the seat. Tighten again these 2 screws (tightening torque 10 Nm). The footrest could be raised up of 13 cm between the end of the frame and the foot support surface.
2) **Depth adjustment of the feet on the footrest**: adjust the strap (**B**) with the 2 buckles (**C**) so that the feet pressing in the middle on the footrest.
3) **Maintaining the feet**: tighten the strap (D) on the feet. Tighten also the leg cover if it's used.

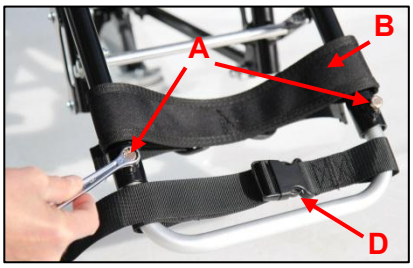

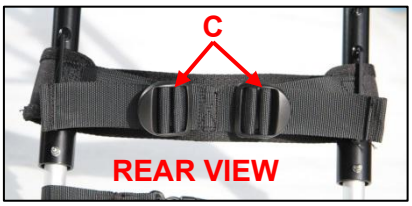

5.4 Manipulation of the ski position lock

Pull on the lever towards you (1) and turn it up (2) to release from ski position and rise up the SNOW'KART in chairlift position.





	IMPORTANT For the lock to be operated, a minimum of weight is required in the seat because the gas jack that assist the rise up in chairlift position, block the lock. Simply press on the seat to add weight and be able to unlock.

5.5 Replacing the levers tips

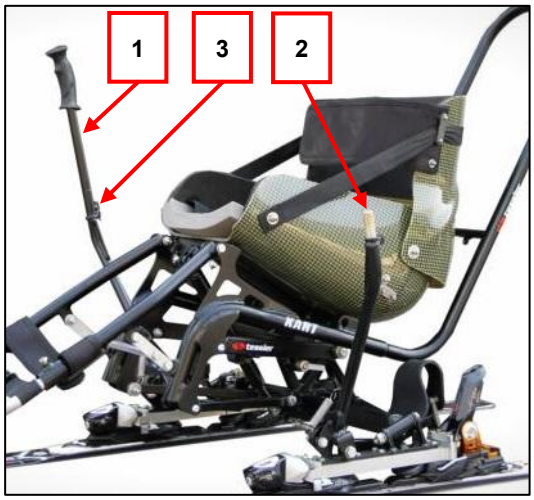

The different lever tips « Adult » (**1**), « Children » and « Easydrive kit » fit in the sleeves (**2**) at the ends of the levers.

	2x10
	9

Replacement is done by unscrewing the screw + nut (**3**) with 2 spanners of 10. Tighten correctly (torque 9 Nm).

For the **Easydrive kit**, the rubber handle can be placed on the right or on the left according to the sitskier's ability.



For the **child levers**, two positions are possible.
The lever can be turned inwards (mounting point 1) or backward (mounting point 2).

You can force on the handle to turn it in the right direction according to the chosen position.

5.6 Assistance bar

The SNOW'KART is delivered with a specific assistance bar as standard. We strongly recommend to the accompanist to be linked to the assistance bar with a lifeline and a belt around the waist as long as the skier doesn't have a good control of the SNOW'KART.

This lifeline (rope) is attached to the top of the assistance bar. The accompanist must always be upstream or inside the turn to be able to restore easily the SNOW'KART balance.

The bar is also very useful for pushing the SNOW'KART to taking the chairlift.



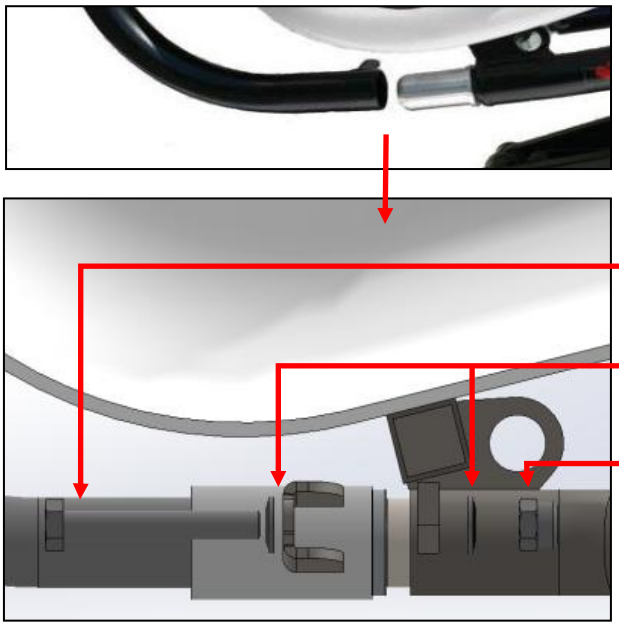

The bar is mounted at the rear of the frame and attached as shown under.

Screws on each side:

1 Screw TH 8x55

2 Washer conical and striped

1 Nut stop (Nylstop)

Tighten correctly with 2 spanners of 13 (torque 15 Nm)

5.7 Adjusting the brake teeth

Disassembly:

1. Remove the nut with a spanner of 10.
2. Remove the flap and 2 washers from the screw (1 on each side).
3. Disassembly the 2 screws + nuts which tight the tooth brake with 2 spanners 10.

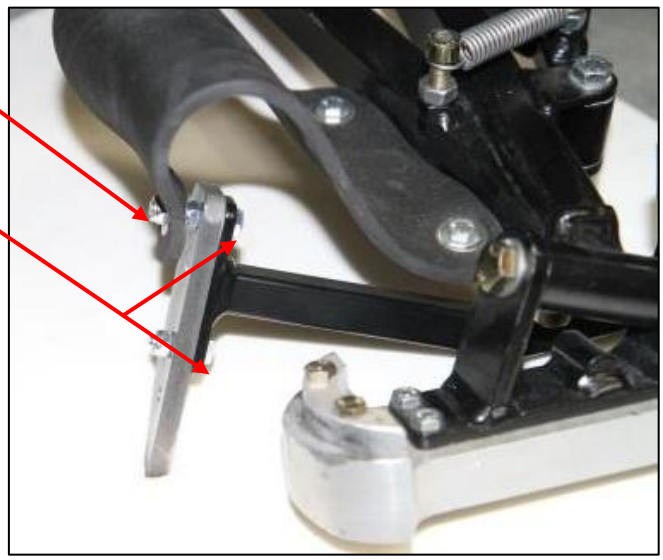

Reassembly:

1. Adjust the brake tooth to the desired height.
2. Put back the 2 screws + nuts by tightening them correctly (torque 10 Nm)
3. Put back the flap with 1 washer on each side.
4. Put back the nut and tight gently so as not cut the flap.

	2x10
	10

6. TECHNIC OF USE

6.1 Advises for the accompanist

The accompanist must have a good ski level to accompany the SNOW'KART user.
It is not compulsory for the accompanist to be linked to the SNOW'KART by a lifeline but it is essential as long as the sitskier does not have a complete control of the SNOW'KART or if the environment requires it (steep slope, hazardous slope sides, etc.).

During the learning process, the accompanist can slow down the SNOW'KART but the sitskier must be able to quickly control his speed by himself. The accompanist must always be present to help and ensure safety.

The accompanist is essential when using the ski lifts or to push the SNOW'KART on the flat areas for example.

While skiing, the accompanist must always be behind and upstream or inside the turn because in case of wrong action of the sitskier, he could avoid a flip over of the SNOW'KART by pulling on the lifeline. This is why the lifeline is fixed at the top of the bar.

6.2 Skiing in SNOW'KART

- The skier must respect the recommendations from this manual in chapter 2.2.
- The skier and his accompanist choose the slopes they take according to their skills.
- During the learning process, it is fundamental to control speed according to the level of ability and never make brutal movement on the levers.
- The sitskier starts on a gentle slope using the "snowplow" technic. To do this, he brings his hands closer and keeps them forward to avoid braking. He more or less releases this snowplow position to manage his speed.
- To make a first turn, starting from the snowplow position, he moves the inside lever slightly away from the turn in the direction he wants to go in order to put the inside ski back flat. The outer hand on the turn keeps the lever tilted so that the ski is on the edge. The outside turn hand keep the lever leaned to keep the ski on the edge. Once the turn is completed, he brings the inner hand on the turn slightly towards the seat so that he does not overturn.
- **Attention:** do not stay in snowplow in strait down the slope but evolve by turning and crossing the slope.
- When turning, the inner ski at the turn must be flat or slightly on the inner edge but must not pass over the outer edge. A stop avoids opening to much the ski on the outside edge.
- A short turn is done with the inner ski flat on snow and the outer ski closed to the maximum.
- The skier will improve his technic to make the most rounded turns possible.
- To keep more speed, the skier could spread his hands until his skis are flat. If the SNOW'KART begins to "float", the skier must put his skis back in a light snowplow position to maintain control of the SNOW'KART.
- Two teeth brake are attached at the back of the levers and could be activated by pulling the levers backward. They are adjustable in height if needed. At the beginning, it is advisable not to use them to be concentrated on the edging work. Then, these brakes could be used in steeper slopes to shorten the radius of turns by braking in the phase of the turn facing the slope.
  The brakes can also be used to stop quickly.

6.3 Skiing in SNOW'KART with the Easydrive kit

The Easydrive kit is intended to people who can use only one hand but also for people with limited upper limb strength or coordination.
See description in chapter 4.2.

- The optional Easydrive kit is mounted in replacement of the upper part of the standard lever tips. It is composed of:
  - The telescopic linkage bar (1) adjustable in length in 3 positions by a lock (2) which is positioned forward and a rubber grip (3).
  - Two identical lever tips (4). When mounting these on the levers, it is possible to choose the direction to have the grip (3) on left or on the right depending on the skier's ability.

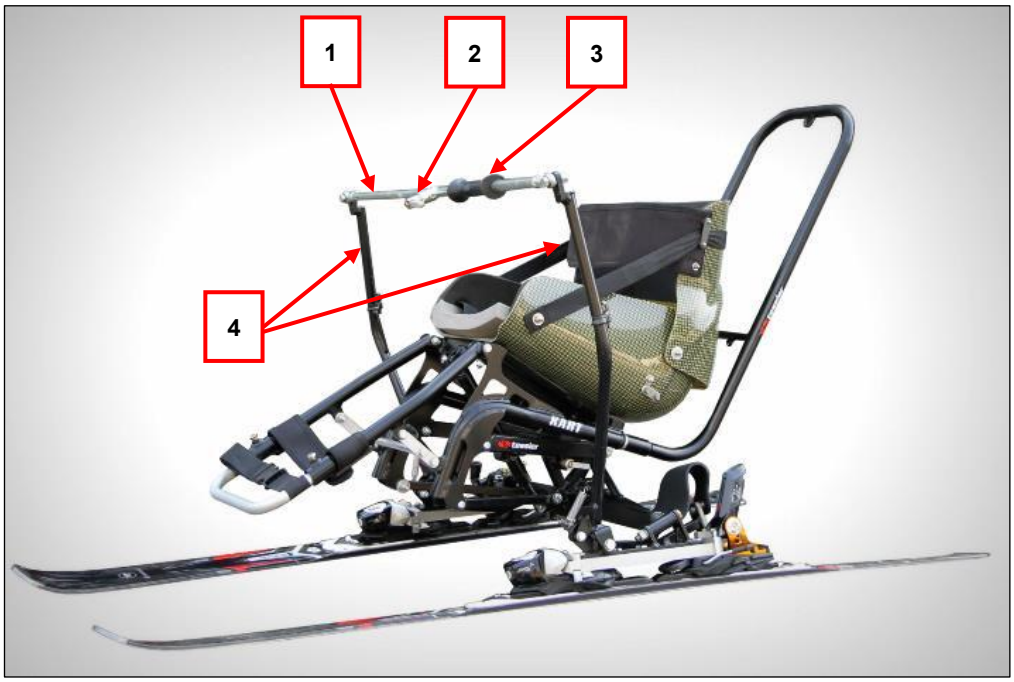

- While skiing, it is therefore necessary to adjust the length of the link bar according to the slope steepness so that the skier can control his speed. **It is necessary to stop to adjust the length of the bar.**
- The skier moves his hand to the left or to the right to choose his direction without making brutal movement.
- He pays attention to not close his turns too much to avoid being perpendicular to the slope to avoid overturning.
- With the Easydrive kit the skier uses the brakes more frequently.

Attention	**CAUTION** **When taking a chairlift**, disconnect the 2 parts of the link bar of the Easydrive kit to allow the frame rase up and not stuck the skier.

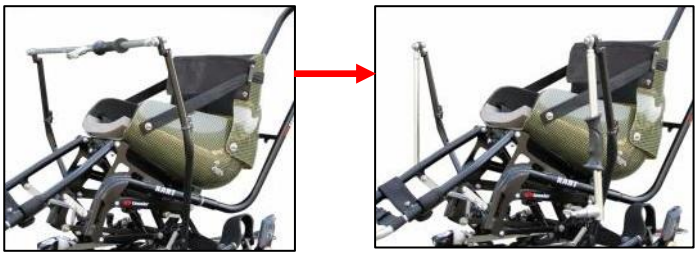

7. MAINTENANCE

Our sitskis are known to be reliable and it is a priority for us to maintain a high level of reliability. The life span of TESSIER® products is 7 years provided that all maintenance instructions are followed.

However, as with any mechanical equipment, it's necessary to pay attention on it. especially since in our application, mechanics are sometimes subjected to extreme conditions. It is difficult to establish a precise maintenance plan because the frequency of use and the level of solicitation of the equipment are very different from one user to another.

We recommend that you report or return to us the SNOW'KART for maintenance every 400 hours of use.

	**IMPORTANT** If the return in our workshop is impossible, the maintenance must be done by a **mechanical professional**. We stay at your disposal to communicate the necessary technical advises.

Between the above mentioned revisions, we recommend a regular maintenance of the SNOW'KART™ according to the board bellow:

Operation / Frequency	Maintenance or repair solution
Store the SNOW'KART in a dry place after each use.	
Visual check before each use or after an impact.	Contact us if there is a problem.
Check the skis and the bindings before each use.	Professional ski shop.
Check every articulation every 100 hours use or after an impact.	Contact us if there is a problem.
Check the frame and seat straps every 30 hours use or after an impact.	Contact us to before sending the straps.
Check the belt and the safety leash before every use.	Contact us for replacement.
When using the chairlift, the gas jack must help enough to rise up the frame.	If loose of strength, replace it, contact us.

8. DELIVERING AND TRANSPORTING

Your new SNOW'KART is either delivered to you fully assembled in our workshop or partially assembled in a cardboard packaging with bubble wrap.
To avoid damage during transport, all removable parts have been packed separately.

Unpacking after shipment by TESSIER:

	**IMPORTANT** Any claim concerning damage to equipment during transport can be considered if it has not been reported in writing to the deliverer.

- Check the packaging for signs of knocks.
- Remove the packaging.
- Carefully remove all the components of the SNOW'KART (seat, etc.) from their packaging and check that everything is there.
- Inspect all parts for signs of damage, tears, dents, bumps, deformation or other defects.
- If any part is damaged or missing, contact us immediately.

Casual transport by the user:
We recommend transporting the equipment without dismantling except for easily detachable skis.

	**CAUTION** In the case of transport with dismantled components, check before use that the assembly is correct and that the screws are tightened properly.

Storage:
After use, wipe your equipment with a cloth.
When not in use, it is recommended to store your frame in a dry place with a temperature above 0°C.

9. RECYCLING



This product has been delivered by an environmentally conscious manufacturer. Please protect the environment and recycle this product at the end of its life at your local recycling station.

10. CLEANING AND DISINFECTION

Do not use solvents. Clean only with a cloth or with water + neutral soap. Allow to dry naturally away from direct heat sources.
To disinfect textile products (foams, fabrics, etc...) use a disinfectant of the Sanytol type.

11. WARRANTY

11.1 Warranty Terms

At TESSIER, we pay special attention to the quality of our manufacturing and the reliability of our equipment. Our warranties take effect as of the date of purchase of the equipment.

Duration of Coverage:

- 5 years for all frames of our alpine ski equipment.
- 2 years for other products and mechanical and textile components (seats, straps, shock absorbers, cylinders, etc.).

11.2 Warranty exclusions

To ensure your safety, our equipment must be used and maintained properly. The warranty does not apply in the following cases:

- Normal wear and tear of the product.
- Damage resulting from an accident, misuse, or negligence.
- Incorrect disassembly, reassembly, or maintenance performed by the customer.
- Installation of parts or accessories that are incompatible with or not intended for the original frame.
- Any modifications made to the frame or its components by the user.

11.3 Coverage Terms

This warranty is limited exclusively to the repair or replacement of the defective part. It constitutes the sole available remedy.

- Filing a Claim: Any request for warranty coverage must be submitted directly to TESSIER or an authorized dealer.
- Shipping Costs: If the equipment is returned for repair, the shipping costs (both ways) to the TESSIER factory or to the local distributor are the sole responsibility of the purchaser.

12. Vertical evacuation of TESSIER® sitski equipment

Thanks to the different tests realized, a unique evacuation procedure for all sitski equipment homologated in France has been defined. It is approved by the French Approval commission presided by the STRMTG.

Two anchor straps of 1m50 (example: anchor strap PETZL C40-150 or anchor strap BEAL BASIC 18mm length 150cm) are necessary.

The first strap will put behind the backrest of the sitski and under the seated skier's arms, and create the first hanging point in front of the skier (**1**).

The second will be put under the frame at the level of the skier's knees, passing in a part of the frame which will keep the strap from sliding backward (**2**).
Both straps will join in one hanging point (3) where will come the karabiner of the rope used for the evacuation.





The evacuation triangle, usually used to evacuate people, can be then used to secure the accompanying person of the seated skier who can be active during the evacuation, also when the safety rail is open.
It is indispensable to secure the accompanying person before opening the safety rail.



In France, as in many European countries, the equipment used for evacuation is property of the ski patrols.
So skiers and first-aid workers have the guarantee to use equipment in perfect shape (stored in a bag to be protected from exterior aggressions, checked every year, with a defined lifetime and replaced when necessary).

For more information, please contact us.



Notes

Watch the tutorial video « How to ski with the Snow'Kart »

You can find it:

- www.youtube.com/watch?v=Ksgl5r7mCp4

- by scanning this QR Code:

- on Youtube, Tessier Adaptive Sports channel

