tessier

ADAPTIVE OUTDOOR SPORTS EQUIPMENT

tandem'flex™

User and Maintenance Manual



Tandem'Flex manual version n°: MTF06-20261005

Design, manufacturing, commercialization & after-sale service

TESSIER
Parc Alpespace, 336 voie Thomas Edison, 73800 Sainte-Hélène-du-Lac, France
Tel. +33 (0) 479.83.51.52 – contact@tessier.sport

www.tessier.sport

TABLE OF CONTENTS

1	**GENERALITIES**	**3**
1.1	Information related to this manual	3
1.2	Symbols in this manual	3
1.3	Labelling	4
1.4	Intended use	5
2	**GENERAL PRESENTATION**	**6**
2.1	Presentation	6
2.2	Technical recommendations	6
2.3	History	6
2.4	Training	7
2.5	Dimensions (cm)	8
2.6	Dimensions without footrest and skis	9
2.7	General characteristics	9
3	**GENERAL DESCRIPTION**	**10**
4	**SETTINGS AND MANIPULATIONS**	**12**
4.1	Adjusting the shock-absorber according to the weight of the passenger	12
4.2	Setting of the brake skates.	12
4.3	Lateral locking mechanism	13
4.4	Manipulation of the lever to lock in ski position	13
4.5	Lifting-up and et locking in up position	13
4.6	Adjusting the handlebar	14
4.7	Attaching the karabiner of the safety-leash.	14
4.8	Disassembling of the footrest	15
4.9	Disassembling and reassembling the handlebar	15
5	**MAINTENANCE**	**16**
5.1	Edging system	16
5.2	Handlebar	16
5.3	Locking system in ski and chairlift position	17
5.4	Safety and parking brakes	17
5.5	Seats	17
5.6	Öhlins shock absorber with Quickset system	18
5.7	Skis, binding and brake skates	18
5.8	Mounting the brake skates equipped with a return spring	19
6	**DRILLING THE SKIS**	**20**
7	**USE**	**21**
7.1	The piloting technique	21
7.2	Chairlift use	25
7.3	Passenger installation	27
8	**SAFETY INSTRUCTIONS**	**28**
8.1	Regarding the passenger	28
8.2	Regarding the environment	28
8.3	Regarding the ski lifts operators	29
9	**DELIVERY AND TRANSPORT**	**30**
10	**RECYCLING**	**30**
11	**CLEANING AND DISINFECTION**	**30**
12	**WARRANTY**	**31**

1 GENERALITIES

1.1 Information related to this manual

This Instruction and Maintenance manual owns all the important information about the use of your TESSIER® product. In order to use it in the safe way and enjoy all of its performances, please read carefully this manual and pay attention to the security and maintenance advices. If you have visual disturbance, or for any other reason, you can ask us the pdf version of the manual and zoom it according to your convenience.

1.2 Symbols in this manual

	**WARNING** Indicates a potentially hazardous situation that could result in serious injury if you do not respect the security checks mentioned.
	**CAUTION** Indicates a potentially hazardous situation that could result in minor or slight injury if you do not respect the security checks mentioned.
	**IMPORTANT** Indicates a potentially hazardous situation that could result in damage of equipment if you do not respect the security checks mentioned.
 	MOUNTING AND SETTINGS INDICATIONS Indicates the spanner size (a) And the value of the torque – Nm (b) to correctly tighten the screws.
	GOOD MANIPULATION Indicates the processes to follow in order to operate correctly the manipulation.
	BAD MANIPULATION Indicates the processes not to follow, shows the wrong way to do the manipulation.

1.3 Labelling

A sticker and an inox plate are fixed on your TANDEM'FLEX™.

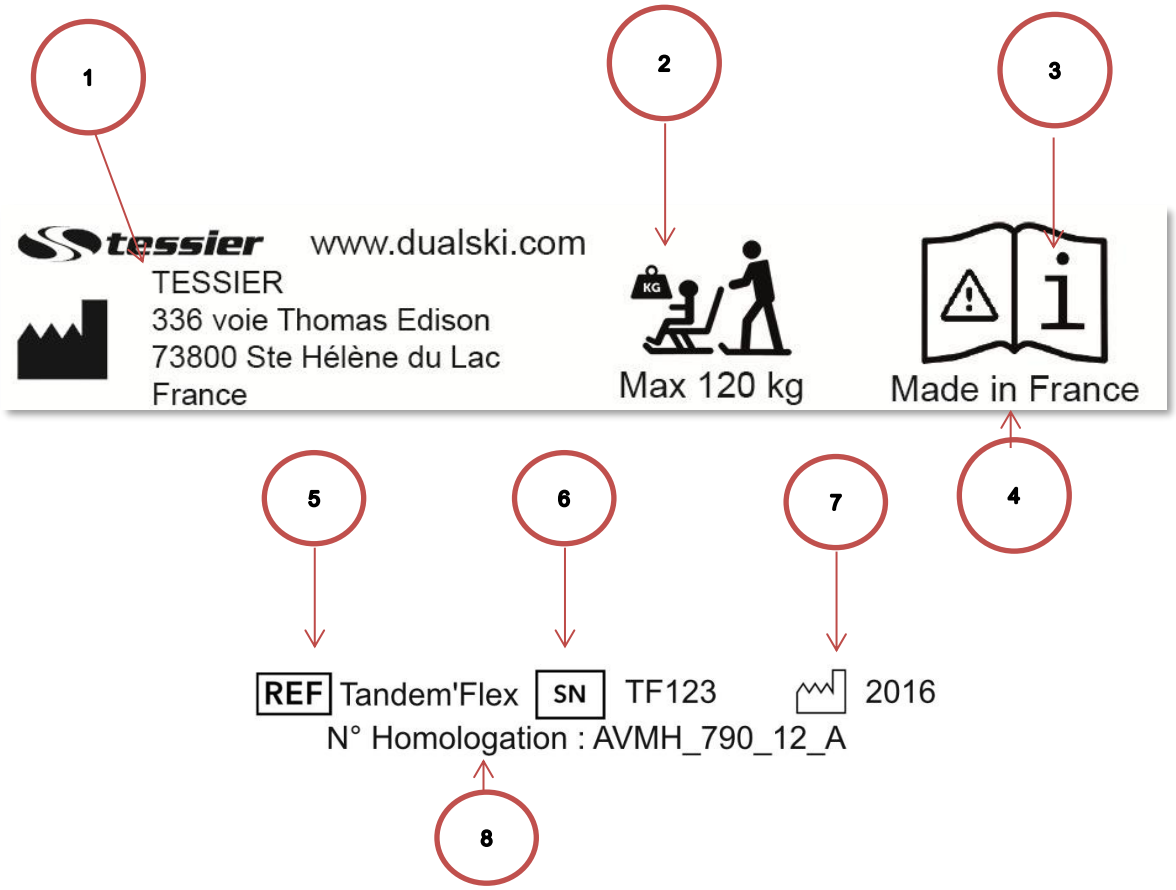

Référence	Désignation	Observations / Explications
1	Manufacturer	Complete name and address of the manufacturer
2	Maximal weight of the sitskier	Weight (in kg) of the sitskier.
3	Manual	Refer to the manual to get all the information in order to use correctly your product.
4	Made in France	Country of production
5	Reference	Product reference for the manufacturer
6	Serial Number	Identification of the product via its serial number
7	Year of production	Year of production of the product
8	Homologation	Homologation number from STRMTG (see chapter 3)

1.4 Intended use

- TANDEM'FLEX™ is a ski frame dedicated to a DUO use (with an accompanying pilot).

- TANDEM'FLEX™ has been designed in order to ski on marked slopes or off-piste accompanied by a qualified mountain professional and to take the ski lifts according to the homologation notice delivered by the "Service Technique des Remontées Mécaniques et des Transports Guidés" (STRMTG), division of the French Ministry of Ecology, Sustainable Development and Transport.

- The minimum recommended age is 5 years old for the passenger and 16 years old for the pilot.

- TESSIER® products can be used in a temperature range of -20 to +35 °C. when use the equipment outside this range, pay closer attention to the elements during the check-up phase.

- Skiing and mountaineering environment in general can be potentially dangerous. Be sure to master and control your TANDEM'FLEX™, responsible of your speed and aware of the risks you take. Respect the security notices, the specific ski resort rules and the general mountaineering laws.

- TANDEM'FLEX™ must be used after the pilot has received specific training on this equipment by a TESSIER® partner trainer.

2 GENERAL PRESENTATION

2.1 Presentation

Since the 2012-2013 season, the TANDEM'FLEX™ has replaced the TANDEMSKI®. These 2 models are sitski equipment that enable people with limited mobility (of all ages and all kind of disabilities) to discover the pleasures of skiing, with the help of an accompanying person, the "pilot".
The TANDEMSKI® had no suspension. The TANDEM'FLEX™ has been totally redesigned around a kinematics and a shock absorber allowing a great comfort for the passenger and a very efficient use of the chairlifts. Numerous improvements allow great riding performance with more ease and simplified handling.

In France, the TANDEM'FLEX™ received the approval number AVMH_790_12_A delivered by the French Validation Commission of sit-ski equipment, presided over by the STRMTG, the French agency for ski lifts and guided transports systems. This notice of approval can be consulted on demand.

Every TANDEM'FLEX™ has an identification plate with the serial number of the apparatus and an approval number.
Piloting the TANDEM'FLEX™ requires specific training for the pilot. It is specified in TESSIER general terms and conditions that all pilots must have followed the training and be certified for the piloting of this specific equipment.
In order to meet this requirement and to identify the qualified persons, TESSIER delivers an accreditation card to the pilots who have followed this training and acquired the required level to pilot this equipment.

2.2 Technical recommendations

The performance and safety of the TANDEM'FLEX™ depends on its state. It is therefore essential to maintain it in good working condition and ensure that:
- Always pay attention to the equipment in order to be aware of any malfunctioning and correct it quickly.
- The original parts installation is respected during repair work. In case of doubt, please contact us.
- The parking brake and the safety brake are regularly checked and function properly.
- The return springs of the brake skates is regularly checked and replaced if broken. In case they malfunction, you must always carry with you a shock-cord to use as a band-aid solution and have them repaired as soon as possible.
- The skis are in good condition. Make certain to have your ski tuning carried out by a specialist.

2.3 History

The experience acquired over the last 20 years with the previous models of TANDEMSKI® has enabled to develop the TANDEM'FLEX™.
Originally, the Institute for motor skills development (IEM) of Hérouville in Normandy came up with the "articulated chair-ski". The project of this establishment (member of the APF - French Association for paralyzed people) was to enable the disabled children and teenagers from the Association to ski. Every year, they organized a ski trip in the Alps.
At the beginning, they used wheelchairs attached on a pair of skis. After a few years and with members of the Institute constantly enhancing the ski-chair, they obtained an articulated system allowing edging.

This project led with passion by Alain Baigné and Philippe Sauvage, draws upon the staff and the children from the IEM.
During the season 1987/88, they met Pierre Tessier who was working in the « ANAE » association holiday center in which they were staying. Because of his mechanic skills and passion for skiing, Pierre Tessier immediately became involved in this project and he created a prototype equipped with a safety brake.
In 1994, hoping to expand the activity, Pierre Tessier designed a new Articulated Ski-Chair with a system allowing the use of chairlifts.
In 1995, Pierre Tessier set up his company to produce and commercialize this new chair. In 2004, the "Articulated Ski-Chair" also called "APF Ski-Chair" is rebranded TANDEMSKI®.

2.4 Training

A compulsory training for piloting the TANDEMSKI® is required to take someone skiing with the TANDEMSKI® in complete safety. The training is the same for the TANDEM'FLEX™. The piloting technique is the same but the manipulations are somewhat different and it is easier to use. For people trained to pilot the TANDEMSKI® but who have never used the TANDEM'FLEX™, practice with another pilot knowledgeable about the TANDEM'FLEX™ is necessary.
Since 1990, APF offers trainings to staff members of the educational and health establishments, volunteers and parents of people with disabilities. The training really expanded from the year 1995 thanks to the new TANDEMSKI® that allows the chairlifts use. Pierre Tessier became then responsible for these training for APF Training.
During the winter season 1998/99, a training program for mountains professionals was implemented.
The duration of the trainings may vary; they usually consist of 4.5 days for the mountains professionals and of 6 to 10 days for non-professional with an intermediate or good ski level.
Besides the specific piloting techniques, the training includes the use of the different chairlifts. The trainees will get into pairs and alternately pilot and be the passenger.
The French Validation Commission, formed by the STRMTG, the union of Ski-lifts operator and the French Disabled Sports Federation (FFH), required in the notice of approval that the training be validated by a certificate. This certificate was delivered by the APF until 2003 and by the French Disabled Sports Federation until 2011. Since 2011, this obligation no longer exists in the notice of approval but remains in the TESSIER user guide. The piloting of TANDEMSKI® and TANDEM'FLEX™ compels the pilots to follow a specific training. It is therefore specified in TESSIER general terms and conditions that all pilots must have followed the training and be certified for the piloting of this specific equipment.

In order to meet this requirement and identify the qualified persons, TESSIER delivers an accreditation card to the pilots who have received this training and acquired the required level to pilot this equipment.

The TANDEM'FLEX™ provides great riding sensations to the passenger and the pilot. Both will have fun but the pilot must pay special attention to the passenger, since the **sitskier's sensation, comfort and safety are the priority**.
This guide explains the piloting of the TANDEM'FLEX™ and its use on the chairlifts but does not contain a disability-awareness training. Trainees without any experience or knowledge on the field of disabilities will need a training module on disabilities.

2.5 Dimensions (cm)

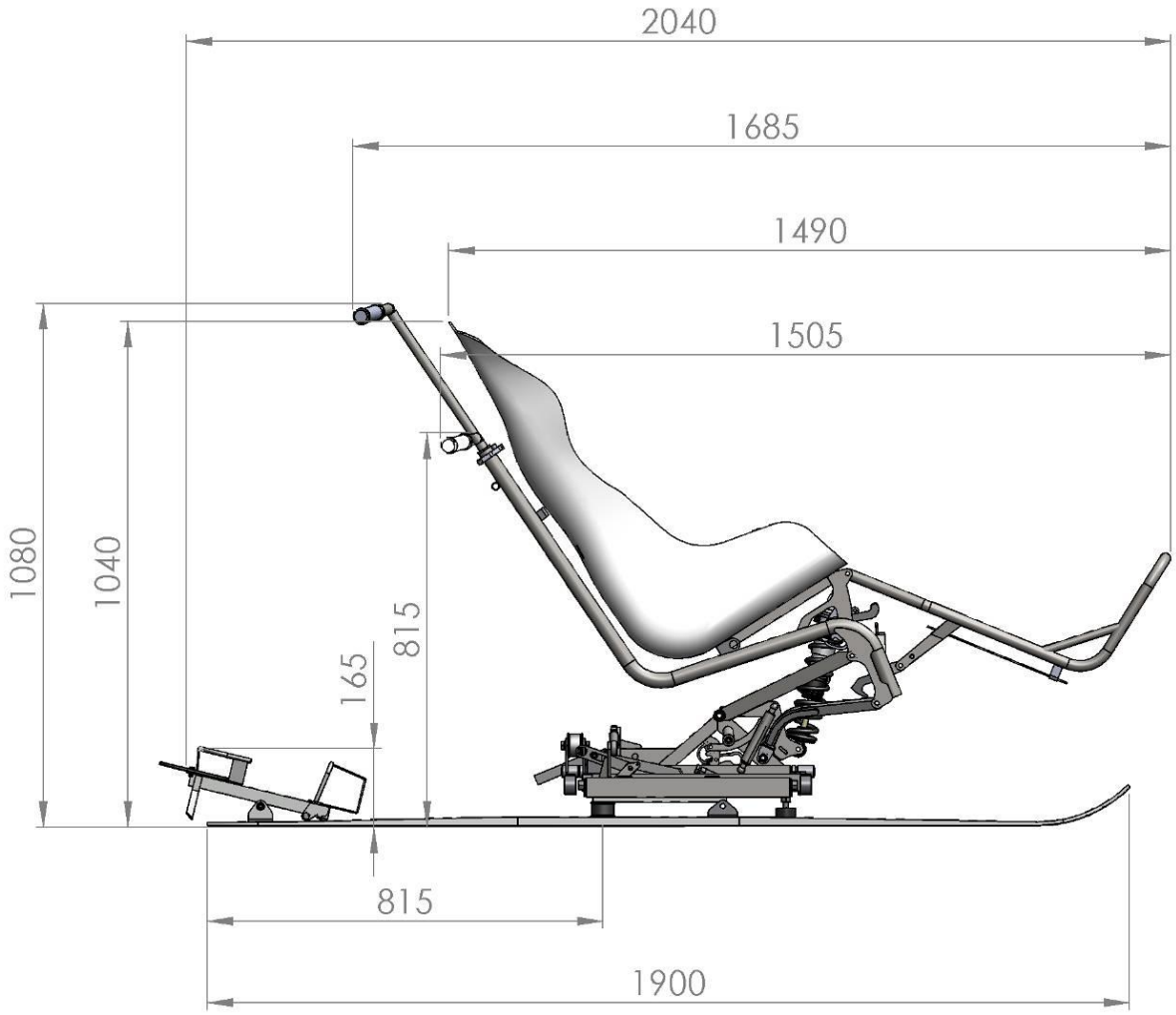

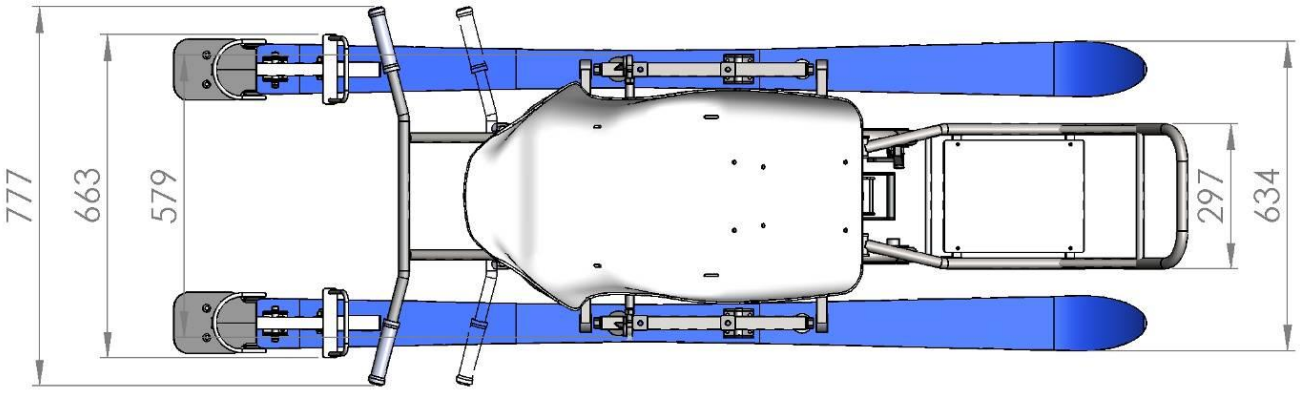

2.6 Dimensions without footrest and skis

To fit it easily in your car (for instance), you can remove the footrest. Two 13mm spanners necessary for this operation detailed in chapter 3.

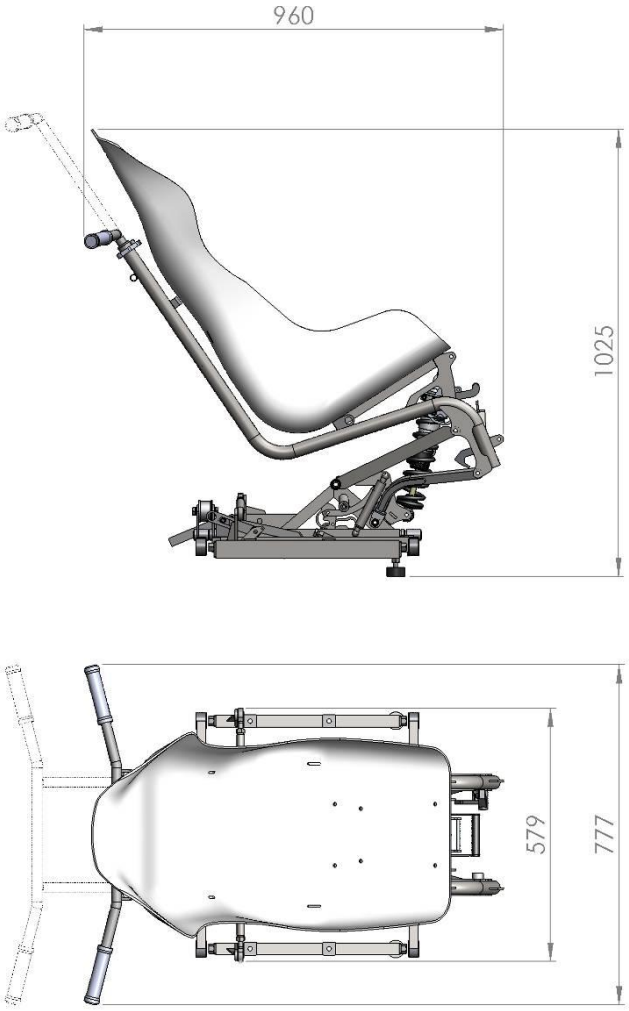

2.7 General characteristics

1. Frame weight without ski: 38 kg.
2. Weight ski + bindings + brake skates: Approx. 9.5 kg.
3. Total weight: 47.5 kg.
4. Ski length recommended: between 175 cm and 190cm. Make certain to follow instructions concerning the drilling scheme: regardless of the ski length, the holes must be drilled at the same distance from the trail of the ski (see diagram chapter 4.6 and chapter 5)
5. The weight range of passengers for the suspension: the shock absorber is adjustable in 3 settings, which allows optimum performances for people weighing from 45kg to 80 kg (see settings, chapter 4). Outside this weight range, the suspension is too hard or too soft. If the TANDEM'FLEX™ is only used for children, a softer spring can be installed and a harder one for people over 80 kg.
6. The passenger's weight is limited to 120 kg, but this limit may be lowered at the pilot's discretion, based on his or her own assessment of ability. An exception up to 140 kg is permitted if the pilot feels physically capable of handling it, provided that a third party assists the pilot and the chairlift is stopped for boarding and unboarding.

3 GENERAL DESCRIPTION

Diagram 1
Overall view

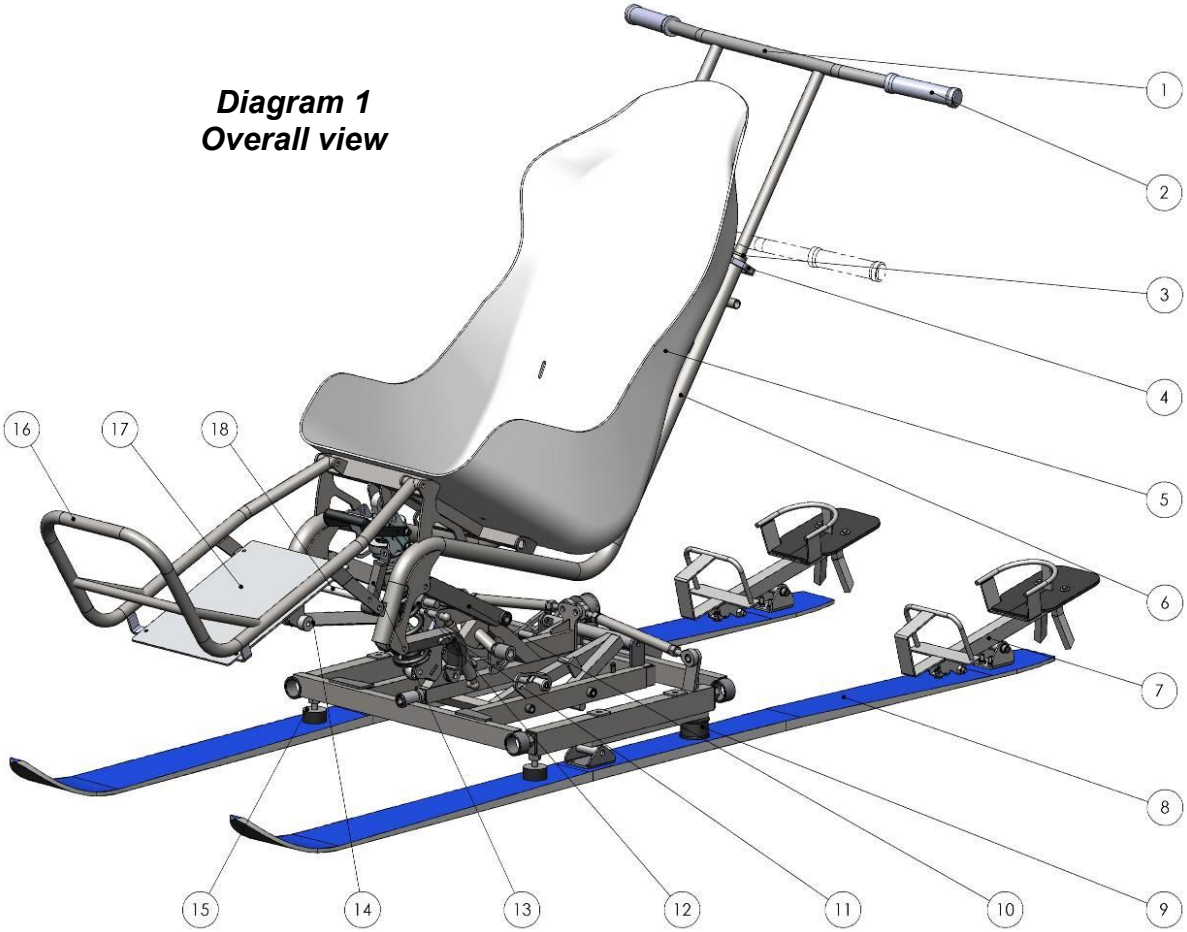

Diagram 2
Close-up view on the lower part of the frame

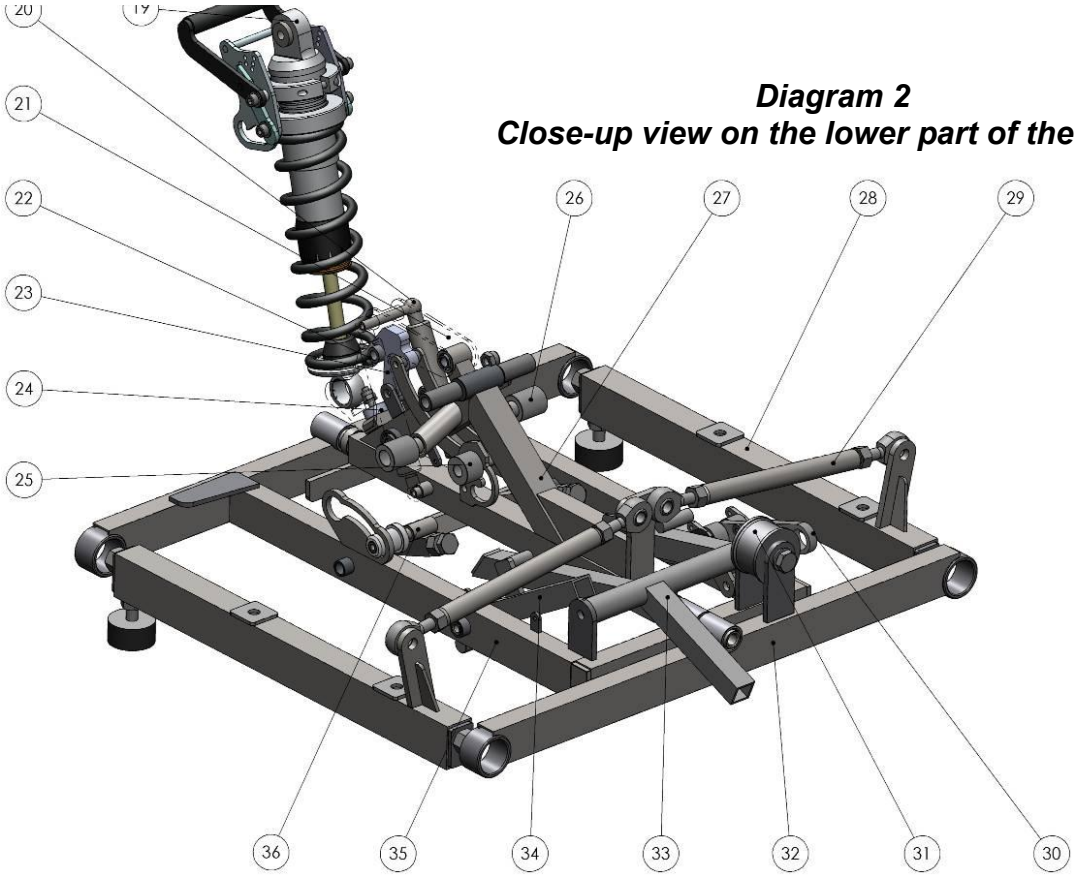

Parts list in diagram 1 and 2

N°	Designation	Qty
1	Handlebar (Telescopic adjustment)	1
2	Handlebar grip	2
3	Handlebar plastic clamping cylinder	2
4	Handlebar quick-release lever	2
5	Bucket seat with cover and harness	1
6	Upper frame	1
7	Complete brake skate	2
8	Ski drilled for the TANDEM'FLEX™	2
9	Ski bindings	2
10	Higher suspension arm	1
11	Lower suspension arm	2
12	Locking roller for high position	1
13	Kickstand locker for high position	1
14	Locking stop for high position	2
15	Elastic stop on front of the ski	2
16	Footrest	1
17	Aluminum plate of the footrest	1
18	Footrest spacer	1
19	ÖHLINS Shock-absorber with the Quickset system to adjust the preload to the weight of the passenger.	1
20	Gas spring (assistance to facilitate the lifting up)	2
21	Suspension connecting-rod	1
22	Locking roller for low position	1
23	Locker hook for low position	1
24	Low position locker stop	1
25	Latch lever in low position	1
26	Inclination stop	2
27	Arms base	1
28	Tilt side arm	2
29	Tilt rod	2
30	Location of safety-leash karabiner	1
31	Silent-block between the low frame and the articulated arm	1
32	Articulated arm of the lower frame	1
33	Safety and parking brake with reset lever	1
34	Reverse safety and parking brake	1
35	Low frame	1
36	Tilt lock stand (Lateral)	1

4 SETTINGS AND MANIPULATIONS

4.1 Adjusting the shock-absorber according to the weight of the passenger

Push the preload lever (A) with the palm of your hand and simultaneously push or lift the position lever (B) with the other hand. When the position lever (B) clicks into one of the 3 positions, release the preload lever (A) as well as the position lever (B) and make sure the tip of the indicator (C) is well positioned: it must point in the direction of the position markers (the holes), and the tip of the indicator must cover half of the lower hole. Choose the position in function of the passenger's weight as represented below.



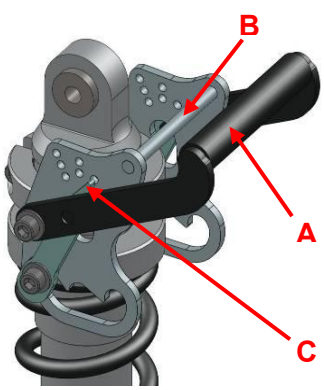	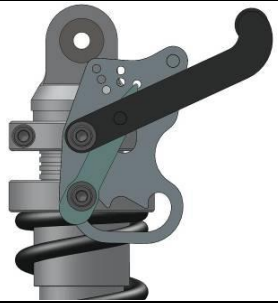		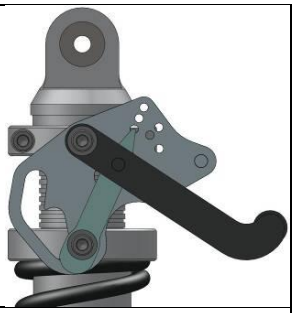
Black spring (serial supplied) ref.00480-04B	*Up to 60 kg / 132 lbs*	*From 60 kg to 80 kg / 132 to 176 lbs*	*From 80 kg / 176 lbs*
Yellow spring for light weights (optional) ref.00480-11Y	*Up to 45 kg / 99 lbs*	*45 to 60 kg / 99 to 132 lbs*	*60 to 80 kg / 132 to 176 lbs*



IMPORTANT
The yellow spring shall only be used for passengers with a weight less than 80 Kg.
Also, it is important to adjust the adjustment notch according to the passenger's weight.
The TANDEM'FLEX™ may be damaged if these recommendations are not respected.

4.2 Setting of the brake skates.

With a 13mm spanner (supplied with the TANDEM'FLEX™):

- Loosen the screw of the front of the skate.
- Move it back or forth with approximately 5 mm of play between the front skate and the shoe.
- Retighten moderately (torque 10 N.m).

	**13**
	**10**



4.3 Lateral locking mechanism



Unlocked Position



Locked Position

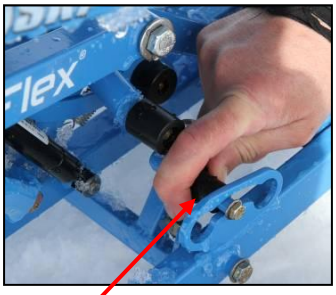

A

Move the lever (A) inward away from its locations and switch to the chosen position. Make sure you reposition it properly in one of the 2 locations that lock or unlock the position of the TANDEM'FLEX™ so that the lever does not change position while skiing or when going on the chairlift.

4.4 Manipulation of the lever to lock in ski position



Locked position

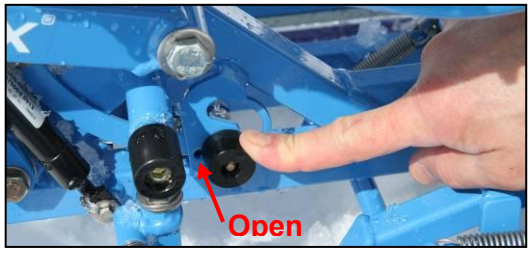

Unkocked position

Pull the release lever upwards and toward the back to unlock the position and lift-up the TANDEM'FLEX™ to the unlocked "chairlift position". The "O" on the part indicates that the TANDEM'FLEX™ is in the "Open" / unlocked position.

Important	**IMPORTANT** In order for the lock to operate, a minimum weight of 50 kg in the seat is necessary. Below this weight, the gas springs that facilitate the lifting-up until the frame is in chairlift position will on the contrary lock it. Push on the seat to add further weight and unlock it





Locked in up position



4.5 Lifting-up and et locking in up position

- Take the handlebar, bend your knee and lift up while pulling towards you. The gas springs mainly assist to initiate the lifting-up.
- Follow the lifting movement: Straighten up as you are lifting the seat up with the help of the frame's kinematic. Thanks to this kinematic, when getting up, the frame stays centered and little strength is required.

- Once it is lifted up to its maximum, lock the TANDEM'FLEX™ in high position: pull the rope and lower the frame until locked. At that moment, release the rope and the weight will lock the position of the frame. To unlock it and get back to the low position, slightly pull the handlebar up or forward.
  The return spring will maintain the unlocked position.

Attention	**CAUTION** Should you move the TANDEM'FLEX™ in its high position, keep pulling the rope so that it does not get back down to its low position.

4.6 Adjusting the handlebar

To adjust the handlebar: Loosen the 2 quick-release levers (B), lower or lift-up the handlebar by sliding it downwards or upwards. To use chairlifts, it is necessary to lower the handlebar as much as possible, (less than 3 cm higher than the frame). See chapter 4 for settings and maintenance.

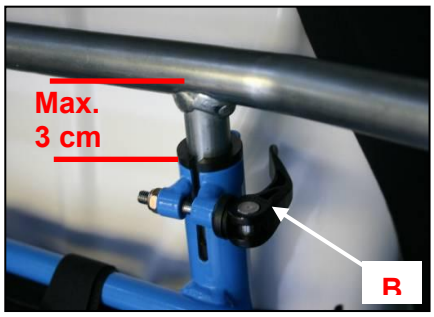

4.7 Attaching the karabiner of the safety-leash.

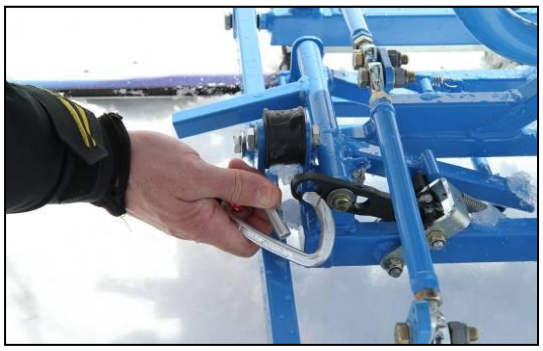



While skiing, the safety-leash must be attached to the safety-brake, and while using chairlifts it must be attached to the handlebar vertical tubes.

Avertissement	**WARNING** Never remove the safety-leash and leave the TANDEM'FLEX™ unattended without engaging the safety brake (which is also a parking brake)

4.8 Disassembling of the footrest

In order to save space during transport, the footrest can be disassembled:

	2x13
	22

- Loosen and remove the 4 bolts using two 13mm spanners.
- Put the screws, nuts and washers on the footrest (to avoid losing them).
- When reassembling the footrest, make sure to put the washers in the right position and tighten properly (torque 22 N.m).

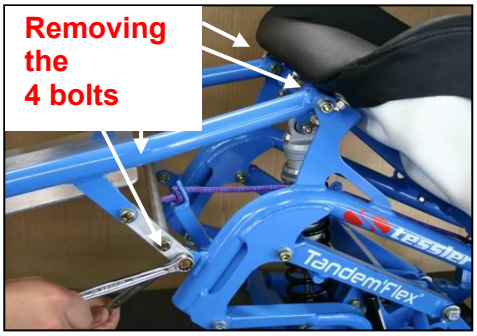

4.9 Disassembling and reassembling the handlebar

Disassembling:

a. Open the quick-release lever
b. Remove the lock-up screw of the clamping cylinder (C) with a 4mm hexagon key.
c. Lift-up the handlebar in fits and starts in order to remove it in the same time as the plastic clamping cylinder (D).
d. If the handlebar is bent and must be replaced, remove the screw (E) with a 2.5mm Allen key (also known as male hexagon key) and a 7mm combination wrench.

Reassembling:

e. A few drops of washing-up liquid around the handlebar clamping cylinders (F) will help you place them back easily.
f. Fit the handlebar with its clamping cylinder (G) back in the frame. Align the clamping cylinder groove with the frame groove and push down the handlebar in fits and starts to reinsert the handlebar with its clamping cylinder.
g. Refit and tighten the screw (C).



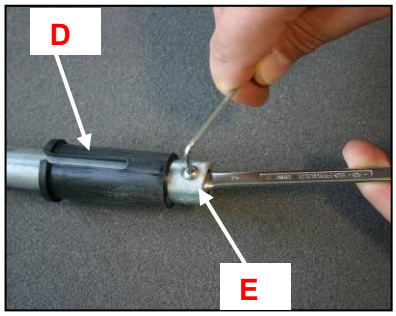

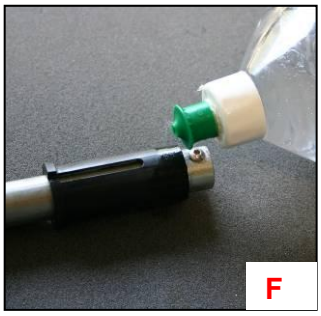

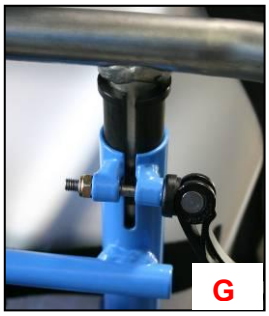

5 MAINTENANCE

It is essential to keep the TANDEM'FLEX™ in perfect condition in order to fully enjoy its performance and use it in complete safety.
Our sitskis are known for their superior quality and reliability. It's one of our priorities to keep this level high. However, as any mechanical equipment, it's necessary to pay attention on it. Especially in our use, the mechanic is put to a severe test. It's hard to make a maintenance plan because the frequency of use and the level of solicitation of the equipment is always different from one user to another. However, we recommend to bring us back or to send us back the TANDEM'FLEX™ every 400 hours.
If it's impossible to bring us back the equipment, the maintenance has to be done by a mechanic professional.
We remain at your disposal to give you the necessary mechanical advices.

Between each mechanical check explained above, we recommend a regular maintenance of the TANDEM'FLEX™ by following the advices bellow.
At the end of the season, store the TANDEM'FLEX™ in a dry place. Apart from a few elements (skis, handlebar, footrest, seat and brake skates), DO NOT DISMANTLE THE EQUIPMENTS (unless it is absolutely necessary). In the event of a specific problem or more important repair, please contact us.

5.1 Edging system

- Of all the articulations of the edging system, only the 4 rod ends (see photo bellow) require periodic lubrication.
- Every 30 hours of use, spray silicone-based lubricant on each side of the rod ends.

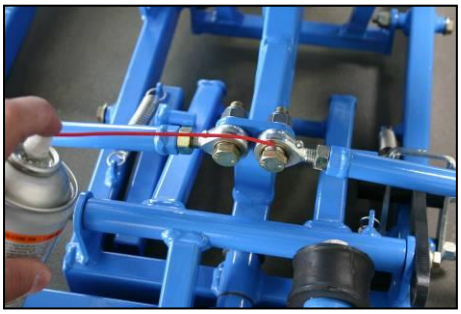

Avertissement	**WARNING** Do not dismantle rods.

- Depending the condition of use, and since the rod ends are wear-prone components, they can loosen. In case of excessive play, they need to be replaced. Replacing them requires to adjust the edging system, which is a specific and precise operation. In this case, please contact us.

5.2 Handlebar

It is necessary to lower the handlebar to the maximum to use the chairlifts. This sliding movement must be easy and effortless. The clamping of the lever needs to be efficient to pilot the TANDEM'FLEX™.



a. If the clamping of the handlebar is not efficient:

- Check the state of the quick-release levers
- Every 30 hours of use, spray silicone-based lubricant on the rotating pins (and their studs) of the quick release levers.

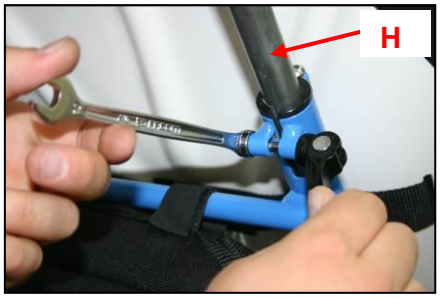

b. If the handlebar does not slide well:

- Check that the handlebar vertical tubes are not bent. If they are straight and the quick release levers function properly, spray silicon-based lubricant on the vertical tubes (H).
- If the vertical tubes are bent: Since the adjustment of the plastic clamping cylinders is very precise, it is hard to straighten the tubes to achieve proper operation. In this case, change the handlebar (see explanation chapter 3).

c. Setting the quick-release levers:

- Open the lever and retighten the nut with a 10mm spanner (supplied with the TANDEM'FLEX™).
- Close the lever to check that the nut is well tightened. Having the rotating pin lubricated allows a better clamping with minimum effort.
- Make sure the handlebar is fully tightened by exerting downward pressure on it.

5.3 Locking system in ski and chairlift position

Make sure the system to lock in low position (ski position) or up (chairlift position) works properly. Malfunctioning could be due to a damaged return spring of each system. To lock in up (chairlift) position, the spring must be strong enough to unlock automatically as soon as the pilot pull the TANDEM'FLEX™ upward.

5.4 Safety and parking brakes

It is essential that the safety brake remain in good working condition.
This brake must be systematically engaged when the equipment is stopped (parking brake) even on a flat land. There you can check its good functioning.
In case malfunction, strip down the 3 axles of the system:

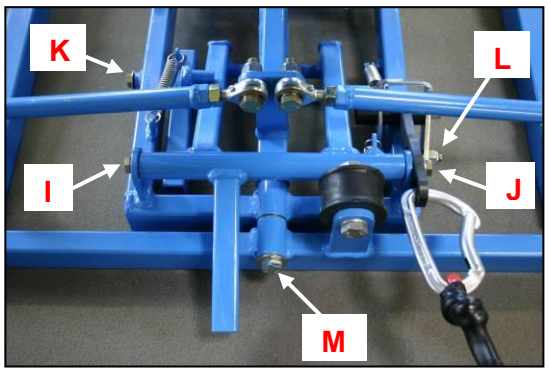

- The front brake axle: by removing the TH8x20 hex-head screw + the washer on the left (I), and the TH8x30 hex-head screw with the bushing of the trigger+ washers on the right (J).
- The rear brake axle: by removing the only 8x10mm hex-head screw + washer (K).
- The axle of the release mechanism: by removing the 8x60mm Hex socket oval head screw + the brake-nut + washers (L).

Important	**IMPORTANT** Do not disassemble the "Arms base" (M) to perform the above-described operations.

	2x13
	22

- Wash the axles properly and reassemble with water-proof heavy grease.
- Check all the parts to make sure they are in good condition.
- If no part is damaged, check the state of the springs.
- Retighten the screws properly (torque 22 N.m).

5.5 Seats

Check the state of the seat cover, the harness and its 4 attachment points and make sure they are well-fitted and tightened. You can remove the seat cover and dry it. Refer to Chapter 11 for cleaning and disinfection methods.

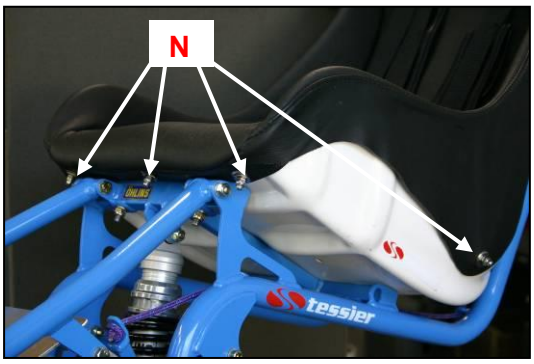

To remove the seat cover:

- With a 10mm spanner, remove all 5 nuts & washers (N).
- Unstrap the 2 Velcro fasteners at the back of the seat.
- Remove the cover from front to back by sliding it upward after you have put the plastic buckles through the holes in the harness.

- It is not necessary to dismantle the attachment point for the harness to remove the cover.

5.6 Öhlins shock absorber with Quickset system

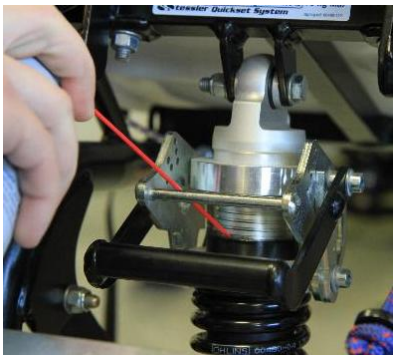

Every 60 hours, spray some silicon or Teflon grease on the aluminium part. This will facilitate the sliding of the polyethylene ring and will make the setting easier.

5.7 Skis, binding and brake skates

For the TANDEM'FLEX™, we recommend the use of 175-190cm long skis.

- If you often dismantle the ski from the frame, you should regularly apply water-proof heavy grease on the four 10x60cm hex-head screws that you use.
- Make sure the 10x80cm hex-head screw is well tightened at the front of the binding. Firmly tighten the screw (torque 34 N.m).
- Make sure your skis are in good state and replace them if necessary. See the drilling schemes (chapter 5). Also check the state of the ski bases and edges and have them repaired by a professional if necessary.
- Make sure there is no play in the articulation of the brake skates. If there is play, change the self-lubricating bearings (see the reassembling in the following section 4.7). Also check that the ski bindings and the brake skates are still tightly installed on the ski.

5.8 Mounting the brake skates equipped with a return spring

1. Position the spring on the skate, the closed end, with the closed extremity at the back.
2. Mount the la plate with the 6 x 25cm flat head hex socket screw and tighten it.
3. Lay the ski flat upon a table surface.
4. From the back of the plate, slide the brake equipped with the torsion spring in the plate.

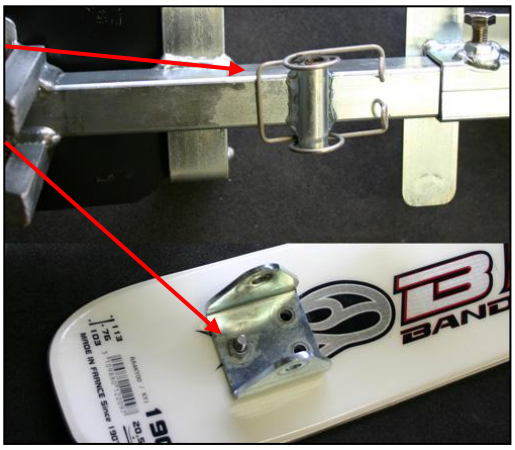

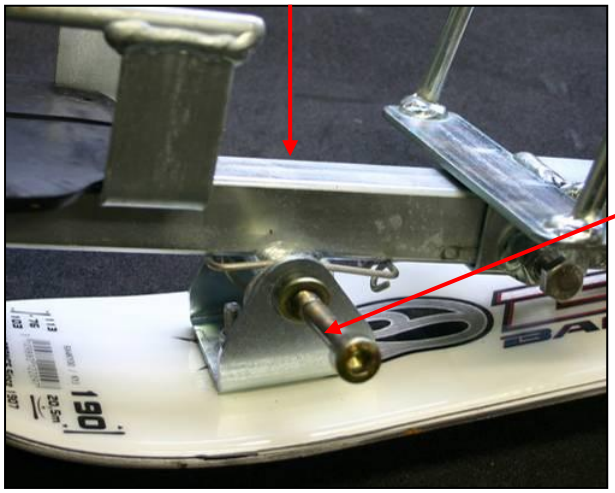

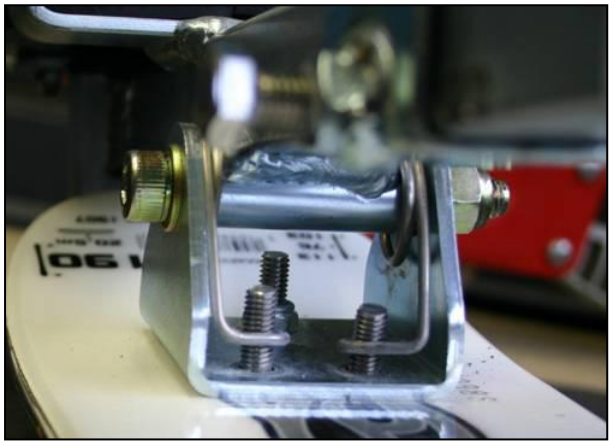

5. Insert the 8 x 65mm hex socket head screw + brake nut + 2 washers.

6. Tighten firmly then loosen slightly (a quarter turn) so that the skate can rotate but without play.

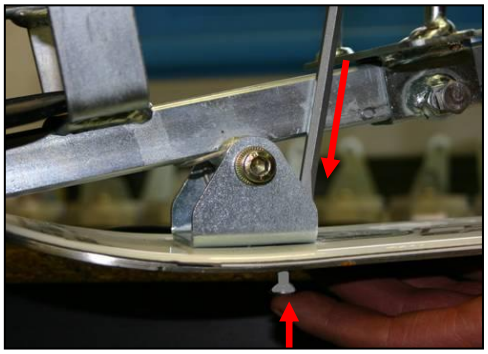

7. From underneath, insert the 6 x 25cm flat head hex socket screw through the ski and at the same time press the spring on the plate with a screwdriver.

8. Idem for the 2nd screw.

9. Once the screw is through the ski, the plate and the spring; place the nuts on the 3 screws and tighten properly. Tighten all screws from 6 to 6 N.m.

	1x10
	1x4
	6

6 DRILLING THE SKIS

1. **Drilling and milling the holes on the ski according to the diagram bellow.**
   It is possible to draw and drill the 7 holes Ø 6.10 mm thanks to the central binding (4 holes) and the rear binding (3 holes).
   For the hole Ø 10.10 mm, respect a precise distance of 224 mm to the tail of the ski.
   Another solution consists in using an old ski, drilled at the good dimensions as a template.
   Mill the holes with a milling cutter at 90° and check that the upper face of the screw be at the level of the ski base or few tenth of millimeters inside.
2. **Mount the bindings.**
   Start by placing the 4 hex socket flat countersunk head cap screws of 6mm but do not tighten it. Place the hex socket flat countersunk head cap screws of 10x30.
   Then tighten all the screws to the indicated torque.
3. **Control that the articulation is tightened.**
   10x80mm Hex-head screw + brake nut + 2 serrated conical washers. Tighten securely: 34 N.m.
4. **Mount the entire brake skate.**
   Follow to the explanation given in Chapter 5.

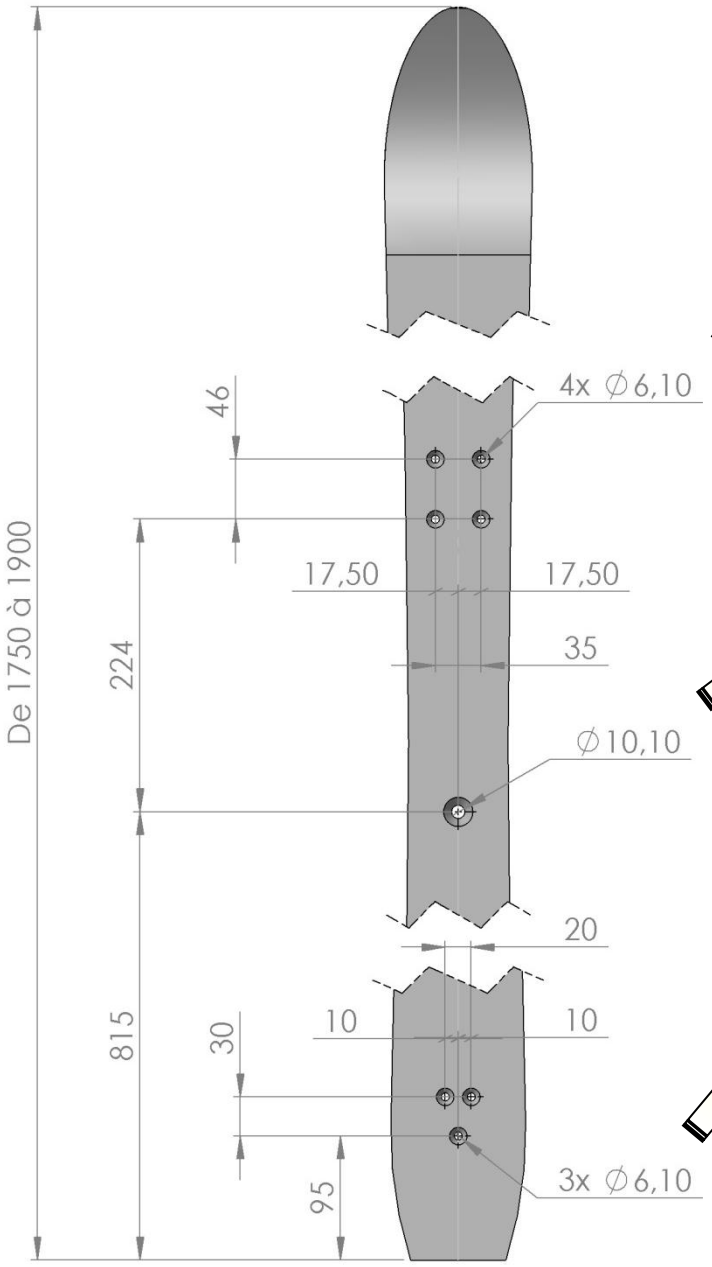

4 holes Ø 6.10 mm with milling
4 hex socket flat countersunk head cap screws of 6x30 or 6x35

	1x10
	1x4
	6

1 hole Ø 10.10 mm with milling
1 hex socket flat countersunk head cap screw of 10x30

	1x6
	20

3 holes Ø 6.10 mm with milling
3 hex socket flat countersunk head cap screws of 6x25

	1x10
	1x4
	6

7 USE

Driver training is compulsory and requires practice.
The explanations below and the tutorial video available on the Tessier YouTube channel and via the QR code opposite accompany this training.
These explanations and the video are not sufficient to master driving the TANDEM'FLEX™ and are no substitute for training with an instructor recognized by Tessier.

7.1 The piloting technique

Some people might be surprised to hear the term "piloting" for the TANDEM'FLEX™. Actually, the brake marks on the snow should only be left when you start learning how to pilot. As the pilot sharpens his techniques, the marks will quickly be replaced and the brakes will only be used briefly. The precision of the piloting and the gliding quality will convince the trainee that the word "piloting" is actually appropriate.

- **The body position and adjustment of the handlebar**

Flexion of the lower limbs joints: hips, knees and ankles. Positioned close to the handlebar, you (the pilot) must keep your chest straight and look ahead. The height of the handlebar must be adjusted so that your arms are slightly bent. If the handlebar is too high or low, you won't be able to handle well the TANDEM'FLEX™.

- **Braking and brake skates.**

At the back of the skis, the pilot takes position inside the brake skates. The pilot activates the brakes with the heels by shifting the body weight to his/her heels. Even when braking, the articulations of the lower limbs, hips, knees and especially ankles must remain bent. A deep flexion of the ankles prevents the pilot from having the buttocks pushed too far backwards.
This kind of breaking should be avoiding and allows you to control your speed without doing any turn, like "snowplough" technique on skis.
Observation: the length of the brake skates is adjustable. The pilot must wear shoes that will provide a good support in the skates, and that are relatively rigid but still allow to walk comfortably on the snow without slipping. We recommend warm trekking boots (with support for the ankle) or snowboard boots.

- **The safety and parking brake**

Located at the back of the frame, it makes it possible to hold the TANDEM'FLEX™ stationary and prevent it to slide both backwards and forwards. Claws stick themselves in the snow when activating a release to which the pilot must be linked by a safety rope.
This brake is used as:

- ✓ A parking brake: as soon as the pilot takes off the safety-leash, he must engage the brake and make sure the TANDEM'FLEX™ is stationary.
- ✓ A safety brake: in case of a fall, the rope will be pulled, which will automatically trigger the brake.

To disengage the brake: with your foot apply pressure to the lever located at the back and the bottom of the TANDEM'FLEX™.

	**WARNING** The safety brake, which also serves as a parking brake, must be systematically triggered as soon as the pilot removes the lifeline and no longer holds the TANDEM'FLEX™.

- **Balances**

The balances are different from those of a skier since there are 2 loads and the weights of the pilot and of the frame with its passenger exert force on the skis. In movement, these 2 loads become 2 forces and by controlling them, the pilot will sharpen his/her piloting technique.

a) Fore aft balance

It depends on:

✓ The weight of the passenger and the frame that is exerted approximately on the center of the ski

✓ The pilot's weight and position. The pilot's weight is exerted at the back of the ski. The pilot has to position himself close to the handlebar as often as possible so that his/her weight is exerting on the center along with the weight of the passenger and the frame. The pilot can also lean his/her hands on the handlebar in order to relieve the ski from a part of his/her weight. When braking, a deep flexion of the ankles prevents the pilot from having the buttocks pushed too far backwards.

b) Lateral balance

Of both balances, it is most essential to control that of the frame + the passenger. The pilot keeps leaning on his two feet, alternatively leaning on one foot or the other to find with the handlebar, the balance point of the frame + the passenger and pilot effortlessly. Except when drifting, the pilot must be positioned in the axis of the frame + passenger.

- **Edging**

There are 2 forces to control and therefore 2 edgings.

✓ Main edging:

By inclining the handlebar, the pilot causes the skis to incline where the weight of the frame + passenger is exerted.

✓ Secondary Edging:

Due to his own weight, the pilot uses the handlebar to make torsion on the skis relating the ski bindings. Ankles and knees joints work to get an internal or external feet support in the brake skates to create the desired secondary edging effect. This action between the main edge and the secondary edging is called "double edging".

- **Straight running down the fall-line**

In triple flexion (hip, knees, and ankles) and positioned closed to the handlebar, the pilot maintains the skis flat with the handlebar. It is necessary to anticipate any lateral movement of the TANDEM'FLEX™. Cause of the weight of the pilot on the back of the skis, the skis wants to switch lead "head to tail". This effect must be anticipated by pressing the knees together to make a slight "wedge" of the skis, this tendency can be controlled. A slight change in pressure to the interior of the feet, from side to side help you to control any deviation of the TANDEM'FLEX™. In case of too much deviation, the pilot can apply a slight touch with the brake to straighten his course.

- **Straight running in a traverse.**

Traversing is crossing a slope without side-slipping. The traverse mustn't transform itself into a diagonal sideslip. The pilot applies sufficient edging by tipping the handlebars into the slope so that the skis will hold on their edges. His position remains flexed, the knees oriented towards the slope with pressure on the feet towards the slope to put the skis on edge all along their length. In this position the TANDEM'FLEX™ skis describe a bend and begin to climb back up the slope, this phenomenon is accentuated by the use of "carving" skis. To put the TANDEM'FLEX™ back on course it is necessary:

✓ Basic Technique:
Touch the downhill brake and briefly release the edges by tipping the handlebars a little towards the downhill to straighten the course, then resuming the initial position.

✓ Refined Technique:
Maintain a strong pressure of the feet towards the slope in the foot blocks, to relax the position of the handlebar to resume a descending course, then to resume the initial position. A good mastery of double edging will help controlling the direction permanently.

The pilot must choose the trajectory in function of the inclination of the slope, and not gather too much speed without touching the brakes. During a traverse, if the back of the Tandem'Flex (where the pilot is) slides down the slope, it is because he is not applying enough secondary edging into the slope.

Observation: the downhill knee is more oriented uphill than the uphill knee. Indeed, if the uphill knee is too oriented uphill, the pilot can't be properly balanced on his/her uphill leg and won't be able to control the weight of the frame+ passenger.

- **The pivot**

This is an essential movement. When the TANDEM'FLEX™ is stopped while traversing across the slope, the skis may be pivoted to face down the slope:

✓ stick the downhill brake (the pivot point)
✓ relax the position of the handlebars away from the slope to find the point where the skis start to slip laterally, pivoting around the downhill brake
✓ release the brake when the TANDEM'FLEX™ is facing down the slope

- **The essential notion of "flat skis"**

One calls the skis flat at the point where the skis can pivot easily on the snow. In reality the skis are not completely flat but they have an angle relative to the snow, allowing the pivoting without catching an edge. This angle is function of the slope and the quality of the snow. The notion of flat skis is essential to the TANDEM'FLEX™ and more generally to all sitskiing.

- **The elementary turn**

This is a pivot that is done while moving. While traversing directly across the slope, the pilot sticks the brake on the inside of the new turn, holding the skis flat with the handlebars. This will initiate the pivoting of the skis towards the new direction. The pilot then begins to progressively edge the skis by tilting the handlebars toward the inside of the new turn, relaxing the brake when the sit-ski is running in the desired new direction. The new direction should be across the hill in the opposite direction, at an angle to the slope such that the pilot can control his speed without touching the brakes. Note: The sticking of the brake must be done in one time without hesitating.

- **The refined turn**

The double edging referred previously allows the pilot to make short radius or even edged turns with a minimal use of the brakes. To initiate the turn, the pilot sticks the inside brake firmly, but very briefly. Below, we study two types of turns that help us to understand the different ways to use double edging:

<u>1. Short radius turns on a steep slope:</u>
The objective is to pivot with as short a radius turn as possible to control speed, and, if necessary, to stop perpendicular to the slope between every turn:
a) To initiate the turn the pilot sticks the downhill brake firmly, with pressure of the feet in the harnesses towards the uphill
b) The pilot relaxes the edges by letting the skis go flat with the handlebars. The pivoting is quick because the weight of the sit-ski and its passenger swings the skis down the slope until the center of gravity of the sit-ski and passenger are aligned with the pivot point (the inside brake)
c) At this moment, to continue a quick pivoting, the pilot must use his own weight to finish the turn. To do this:

- ✓ The pilot inclines the handlebars to the inside of the turn to make the shovel grip
- ✓ The pilot moves his knees to the outside of the turn (pressing on his feet to the outside of the turn) in order to put the rear of the skis flat and let the rear of the TANDEM'FLEX™ go into the slope. For a moment, the secondary edging is opposite to the principal.
- ✓ When the TANDEM'FLEX™ is perpendicular to the slope in the new direction, the pilot make a firm edge set with the handlebars and he reverses the pressure on his feet to press uphill. Be careful not to go fakie!

Observation: Beware of the snow conditions that can completely change the way of piloting. A short pivot is more difficult to obtain in soft snow. The TANDEM'FLEX™ turns more easily on hard-packed snow.

2. Long radius turns on a gentle slope:

The objective is to get smooth sliding or even carving turns

a) If the initiation of the turn is done when the TANDEM'FLEX™ is facing down the fall-line, a very brief sticking of the brake will be enough. The pilot can also initiate the turn with double edging, by using secondary edging in reverse to principal edging, but the initiation will be less precise

b) The pilot inclines the handlebar progressively and soon on the inside of the turn. This way the TANDEM'FLEX™, that might be too inclined towards the inside and therefore on the edge of losing balance, does not pivot. Even on low slopes, the inclination angle may be great due to the centrifugal force. At the same time, at the back, the pilot leans on his/her feet on the inside of the turn to make the skis carving over their whole length.

Observation: the exterior knee from the turn is more inclined towards the inside of the turn than the interior knee. Indeed, the pilot must stand with proper balance on the interior leg in order to be able to re-establish the balance of the frame+ passenger if necessary.

3. Heavy snow turns

It helps you turning quickly in heavy or difficult snow.

a) Use briefly and frankly the downhill brake.

b) The pilot releases the edging and look to get skis flat with the handlebar.

c) To stop pivoting when the TANDEM'FLEX™ is in the fall line, the pilot:

- ✓ Lean the handlebar to the outside of the turn to make the front ski tips gripping.
- ✓ Push outside with the downhill foot to make the back ski tip flat.
- ✓ Raise the uphill foot (push up and front of the uphill brake skate) to remove pressure on the uphill ski.

With those two last actions, the grip is reduced at the pilot weight point and the rear of the TANDEM'FLEX™ will pivot quickly.

- **Side-slipping**

1. Lateral sideslip

We call slide-slipping when the TANDEM'FLEX™ slides perpendicular to the slope. From a stopped position perpendicular to the slope, the pilot relaxes the handlebars away from the hill to find the point of lateral sliding. The knees and especially the downhill knee are inclined uphill. Once the point of side-slipping is found, the movement of the handlebars is almost frozen. The difficulty is in keeping the TANDEM'FLEX™ perpendicular to the slope. To do this the pilot inclines both knees, press with his feet, alternately uphill and downhill (double edging) and can also use the downhill brake. While side-slipping the pilot is slided over from the TANDEM'FLEX™. The weight of the TANDEM'FLEX™ + passenger is unbalanced downhill, so the pilot has to control the total weight by staying uphill. This position could be exhausting. Careful of edging mistakes!

Observation: Side-sliding is difficult in fresh snow because the snow accumulates under the TANDEM'FLEX™ and blocks it.

2. Forward sideslip:

Crossing a slope while slide-slipping. It can be very useful in certain conditions (busy slopes, steep slopes). It avoids the accumulation of the snow under the TANDEM'FLEX™.

The pilot uses the same method as the lateral sideslip and let the front ski tip going more downhill to go forward.

7.2 Chairlift use

It is advisable to use at least triple chairlifts. It is possible to use double chairlifts if you can lower the safety bar. In France, the TANDEM'FLEX™ received the approval number AVMH_790_12_A delivered by the French Validation Commission of sit-ski equipment. The TANDEM'FLEX™ is not approved for the use of Poma or T-bar lifts.

1) Talk with the chairlift driver. Ask him to call the uphill lift driver to inform them that you are there. Except on a detachable chairlift, you should ask a low speed or if it's necessary to stop. The chairlift driver has to keep a close eye on you and to be ready to press the stop button. The chairlift driver should not help you except in the case of the lift is stopped.

	**WARNING** Never use a ski lift without the consent of the operator.

2) First, look at the environment:

- Can the chair lift stop or slow down? It is advice to make the chairlift stop if it has 2 or 3 places even if it has a small speed. It is necessary to ask systematically to load and to get down of the chair lift in small speed on a 4 or more places chairlift. Anyway, the stop must be asked if any criterion in relation to security requires it. With a detachable chairlift it's possible to go without slowing down the speed.
- Have a look to the departure & the arrival and the slope.
- Make a first empty try or ask for the stop of the chairlift the first time.

All these criteria's help the pilot to judge the loading speed to ask to the chairlift driver. For information, the accreditation shows these following loading speeds:

- Fixed 2 places chairlifts: stopped loading
- Fixed 3 and more places chairlift: 1 m/s
- Fixed chairlift with treadmill: 1.5 m/s
- Detachable chairlift: normal use speed
- Downloading should be done not faster than the loading speed.

3) Prepare the TANDEM'FLEX™ before going to the boarding point:

- Check that the 4 points harness is properly adjusted and tightened.
- **Lateral inclination**: lock the inclination of the TANDEM'FLEX™ (see explanation chapter 3).
- **Lock**: unlock the low position (ski position).
- **Handlebar**: lower the handlebar. **Make sure it is almost entirely lowered** (Max 3 cm from the frame)
- **Karabiner**: hook the safety leash karabiner to the handlebar vertical tubes.

Always think « **LLHK** » before going on the chairlifts.

	**WARNING** Forgetting one of these 4 actions can lead to a serious accident. It is imperative to check before entering the boarding area: ○ The lateral inclination must be locked. ○ The frame must be unlocked. ○ The handlebar must be depressed. ○ The safety leash must be hooked to the handlebar dip tube.

Then, for the lifting up, there are 2 possible methods depending on the chairlift:

- Lifting up before getting to the boarding point. We recommend this method (unless if it's not easy to move to the boarding point with the TANDEM'FLEX™ in its high position). This method leaves more time to get into position in front of the seat but requires holding the rope

that locks into the TANDEM'FLEX™ in high position while pushing so that it doesn't fall back into the low position.

- Get into position in front of the chairlifts and lift up. This method is recommended if it is not easy to move to the boarding point with the TANDEM'FLEX™ in its high position but does not leave enough time if the seats are narrow.

4) Position the TANDEM'FLEX™ in front of the chairlift, the pilot usually sits on the left but can also sit on the right.

- On a triple chairlift, position the TANDEM'FLEX™ at the center.
- On a more than 3-seater chairlift, position it towards the center of the seat and as far as possible from the restraining bars.

5) Depending on the type of chairlift, ask to make it slow or stop it and sit the TANDEM'FLEX™ all the way back on the chairlift seat. To unlock the TANDEM'FLEX™ and sit it down, pull forward the handlebar with one hand and hold the seat with the other. Put one of your feet on the TANDEM'FLEX™ ski to block it.



CAUTION
It is essential to release the lock before seating the TANDEM'FLEX™ on the chairlift seat to avoid boarding in the high position.

- Position yourself sufficiently in front of the TANDEM'FLEX™ so that you can sit down before the chairlift seat meets your own legs and board.
- When boarding, **push the TANDEM'FLEX™ as far back in the seat**. To be efficient, take one hand on the handlebars and one hand in front of the seat of the TANDEM'FLEX™ and pull it back while making a right-left translation movement allowing it to slide more easily flat on the chairlift seat.
- Hold the TANDEM'FLEX™ against the backrest of the chairlift seat until the restraining bar is folded down. To do so, hold the handlebars and pass your elbow behind the backrest. **Fold down the restraining bar as soon as possible.**



WARNING
Always make sure that the TANDEM'FLEX™ is sitting as far back as possible on the chairlift seat.

Have a good time chatting with your passenger while going up

Arrival:

1. Raise the restraining bar up just before arriving.
2. Just before the tips of the ski touch the snow, slightly push upwards and forwards on the handlebar with one hand, and hold the seat with the other hand. Putting pressure on the bar before the tip touch the snow allows the TANDEM'FLEX™ to remain balanced in its high position and facilitate getting out of the chair.
   If the TANDEM'FLEX™ has not landed using this method, reapply a similar effort when leaving the landing area.
   Depending on the profile of the landing surface, one or the other method should be used.
3. Once the TANDEM'FLEX™ is out of the chairlift, let it get back to its low position. Thanks to the shock-absorber, the passenger won't feel any impact. Keep clear the arrival in order not to stand on the way of the other skiers.
4. **Karabiner:** Hook the karabiner on the safety brake. If there's a steep at the arrival, you can engage the safety brake straightaway, before carrying out the other manipulations.
5. **Handlebar**: lift the handlebar up and adjust it before going down the slopes.
6. **Lock**: Lock the low position.
7. **Lateral inclination**: Unlock the inclination.
   Think: **KHLL** (manipulations in reverse order compared to the boarding).
8. Release the safety brake if it was, engaged.



IMPORTANT
When unloading the chairlift, in order not to damage the TANDEM'FLEX™, the frame must not be locked in the upper position by pulling on the rope. This action

	generates significant efforts which can break certain parts of the TANDEM'FLEX™ and which would not be covered by the guarantee because it results in of misuse.

	**CAUTION** Before going back on the slopes, make sure that**:** ○ The lateral inclination must be locked. ○ The frame must be unlocked. ○ The handlebar must be depressed. ○ The safety leash must be hooked to the handlebar dip tube.

7.3 Passenger installation

- ✓ If you use the warm cover, place it on the seat and open it from top to bottom before you install the person.
- ✓ Install the person in the seat and in the cover, and then zip it up.
- ✓ Loosen the belt and the shoulder straps of the harness enough to insert the passenger's arms through. Fasten the 2 belts first and then the 2 shoulder straps of the harness.
- ✓ Fasten the removable strap around the feet on the footrest.
- ✓ If the passenger does not control his/her arms or movements, place the arms inside the warm cover, in the straps of the harness or tie them with an additional strap.
- ✓ If necessary, add specific inserts between the person and the seat for a better hold.

8 Safety instructions

Wearing a helmet is recommended for both rider and passenger.

8.1 Regarding the passenger

The TANDEM'FLEX™ is very fun to pilot but the pilot must always remember that he/she practices this activity for the sitskier. Consequently, the pilot must always pay attention to the passenger and make sure that he/she enjoys the ride, comfortably and safely. Before going on the slopes, the pilot has to collect information from the passenger or the persons that accompanies him/her (if the disability of the person makes it hard to communicate clearly) on the specific precautions to take.

The main points to consider carefully are:
- The fear that might feel the person
- Comfort: if necessary, place extra cushions in the seat, under the knees...
- Temperature: as the passengers stays seated and is not active, he can get cold quickly.
Make sure your passengers wear warm clothing, warm gloves, cap, scarf… Take the time to install the warm cover.
- Frailty: Because of their handicap, the passenger can be weak. It is important to be very careful and avoid jolts. The pilot must adapt its piloting and the choice of slopes to the passenger.
- Altitude: due to their disability, some people might have breathing problems that prevent them to go up to higher altitudes. It is therefore vital to collect information about the passenger on this matter.
- Sun: don't forget that the passenger must be protected against the sun (sunglasses, sunscreen and lip balm).

8.2 Regarding the environment

A TANDEM'FLEX™ pilot must anticipate the risks on the slopes and be more vigilant than other standing skiers.

Remember these points:
- Check and adjust your equipment before skiing.
- In a ski area you don't know, first check the slopes and lifts you wish to use in order to be sure to follow this itinerary with a good safety margin.
- You must always be attached to your TANDEM'FLEX™ by the belt and safety leash that are linked to the safety brake. When you stop, the safety brake must consistently be engaged if you're not connected to the TANDEM'FLEX™, even on a flat area.
- Always keep control of the TANDEM'FLEX™. Always make sure you can stop and avoid other skiers and obstacles on the slopes. When you overtake other skiers, it is your responsibility to overtake them safely. He/she has the priority and if he/she suddenly decides to change direction, you must avoid collision
- Whether you are skiing alone or with a group, avoid stopping in places where you could block the trail. Do not stop where the skiers that are going down can't see you. Be cautious when you cannot see what is going on downhill: A skiers may have fallen on the path where you intended to go, make sure you can avoid him.
- After stopping on the side of the slope, look uphill before going down. As if you were to cross a busy road.
- As for road, ski slopes often intersect with others. In those usually crowded area, be careful and yield to other skiers
- Respect the signs. There are always a safety reasons if a slope is closed (temporarily or permanently)

- The pilot, according to his level of practice, his resistance and his physical strength will have to estimate the people he can take with him according to their weight, the type of ski lifts and the slopes available on the ski area as well as the weather conditions. The spirit of prudence and responsibility being the priority, it is normal that a pilot refuses to take a person with him if the safety conditions are not all met.
- Do not be overconfident. Do not ski faster than the conditions (slope, snow, your ski level and physical conditions…) allow you. Watch out.

8.3 Regarding the ski lifts operators

-Signal your presence
- Wait for the operator agreement before going on the loading area
- If needed, explain him that in any circumstance he must be ready to stop the lift in case of emergency.
- In case of problem, stay calm and speak with him. Don't enter in conflict.

We remind you that the use of the TANDEM'FLEX™ presents some risks and requires appropriate technics and safety measures which are the sole responsibility of the users.

To resume, there are 3 goals to keep in mind:

1 – **The pleasure of the seated skier**:
Adapt you driving to his desire (fast or not, breaks, sensations…)

2 - **Comfort of the seated skier**:
Be responsible of your passenger and think of his own good (gloves, solar cream, special precaution…)

3 - **Security**: **Do not overtake your limits.**

Enjoy the ride!

9 Delivery and transport

Your new TANDEM'FLEX™ is either delivered to you fully assembled in our workshop or partially assembled in a cardboard packaging with bubble wrap.
To avoid damage during transport, all removable parts have been packed separately.

Unpacking after shipped by TESSIER®:



IMPORTANT
Any claim regarding damage to equipment during transport can be considered if it has not been reported in writing to the deliverer.

- Check the packaging for signs of knocks.
- Remove the packaging.
- Carefully remove all the components of the TANDEM'FLEX™ (seat, etc.) from their packaging and check that everything is there.
- Inspect all parts for signs of damage, tears, dents, bumps, deformation or other defects.
- If any part is damaged or missing, contact us immediately.

Routine transportation by the user:
We recommend transporting the equipment without dismantling except for easily detachable skis.



CAUTION
In the case of transport with dismantled components, check before use that the assembly is correct and that the screws are tightened properly.

Storage:
After use, wipe the equipment with a cloth.
When not in use, it is recommended to store your frame in a dry place with a temperature above 0°C.

10 Recycling



This product has been delivered by an environmentally conscious manufacturer. Please protect the environment and recycle this product at the end of its life at your local recycling station.

11 Cleaning and disinfection

Do not use solvents. Clean only with a cloth or with water + neutral soap. Allow to dry naturally away from direct heat sources.
To disinfect textile products (foams, fabrics, etc...) use a disinfectant of the Sanytol type.

12 WARRANTY

12.1 Warranty Terms

At TESSIER, we pay special attention to the quality of our manufacturing and the reliability of our equipment. Our warranties take effect as of the date of purchase of the equipment.

Duration of Coverage:

- 5 years for all frames of our alpine ski equipment.
- 2 years for other products and mechanical and textile components (seats, straps, shock absorbers, cylinders, etc.).

Special Provisions for Skis: The skis supplied with the TANDEM'FLEX™ are wear parts (consumables) subject to heavy stress. Except in the case of a proven manufacturing defect at the time of delivery, wear and tear resulting from use is considered normal and is not covered by this commercial warranty.

12.2 Warranty exclusions

To ensure your safety, our equipment must be used and maintained properly. The warranty does not apply in the following cases:

- Normal wear and tear of the product.
- Damage resulting from an accident, misuse, or negligence.
- Incorrect disassembly, reassembly, or maintenance performed by the customer.
- Installation of parts or accessories that are incompatible with or not intended for the original frame.
- Any modifications made to the frame or its components by the user.

Specific Safety Clause (TANDEM'FLEX™): The warranty is automatically void if the TANDEM'FLEX™ pilot does not hold the official certification issued by TESSIER (obtained upon completion of a specific pilot training course provided by our network of partners).

12.3 Coverage Terms

This warranty is limited exclusively to the repair or replacement of the defective part. It constitutes the sole available remedy.

- Filing a Claim: Any request for warranty coverage must be submitted directly to TESSIER or an authorized dealer.
- Shipping Costs: If the equipment is returned for repair, the shipping costs (both ways) to the TESSIER factory or to the local distributor are the sole responsibility of the purchaser.

13 VERTICAL EVACUATION OF TESSIER™ SITSKI EQUIPMENT

Thanks to the different tests realized, a unique evacuation procedure for all sitski equipment homologated in France has been defined. It is approved by the French Approval commission presided by the STRMTG.



Two anchor straps of 1m50 (example: anchor strap PETZL C40-150 or anchor strap BEAL BASIC 18mm length 150cm) are necessary.

The first strap shall be passed behind the backrest of the sitski and under the sitskier's arms, creating a point of attachment in front of the user **(1).**
The second strap shall be passed under the frame at the level of the skier's knees, passing in a part of the frame preventing the strap from sliding backward **(2).**
Both straps thus meet at a single point where the rope used for evacuation will be hooked in **(3).**

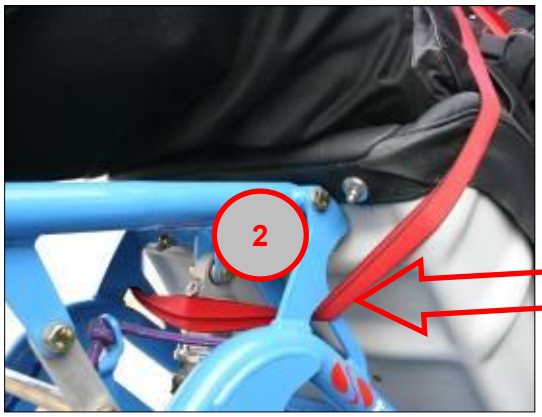



The evacuation triangle, usually used to evacuate people, can be then used to secure the accompanying person of the seated skier who can be active during the evacuation, also when the safety rail is open.
It is indispensable to secure the accompanying person before opening the safety rail.



In France, as in many European countries, the equipment used for evacuation are property of the ski patrols.
So skiers and first-aid workers have the guarantee to use equipment in perfect shape (stored in a bag to be protected from exterior aggressions, checked every year, with a defined lifetime and replaced when necessary).

For more information, please contact us.