tessier

ADAPTIVE OUTDOOR SPORTS EQUIPMENT

tempo™

User and Maintenance Manual



TEMPO™ ***manual version n°: MTO06-20261005***

Design, manufacturing, marketing & after-sale service

TESSIER
Parc Alpespace, 336 voie Thomas Edison, 73800 Sainte-Hélène-du-Lac – France
Tel. +33 (0) 479.83.51.52 contact@tessier.sport

www.tessier.sport

TABLE OF CONTENTS

1	**GENERALITIES**	**3**
1.1	Information related to this manual	3
1.2	Symbols in this manual	3
1.3	Labelling	4
1.4	Intented use	5
2	**PRESENTATION AND INSTRUCTION OF USE**	**6**
2.1	Presentation	6
2.2	Recommandations	7
2.3	The TEMPO™ Duo Pilot training	9
2.4	Choice of skis	9
2.5	Choice of bindings	10
2.6	Mounting of the binding onto the ski	10
3	**USE OF CHAIRLIFTS AND T-BAR LIFTS**	**11**
3.1	Drag lifts use	11
3.2	Chairlifts use	16
4	**GENERAL DESCRIPTION**	**20**
5	**TECHNICAL EXPLANATIONS, ADVICES AND AJUSTMENTS**	**22**
5.1	Seats	22
5.2	Protection covers	23
5.3	Footrests	24
5.4	Releasing of the locking mechanism	24
5.5	Assistance and Piloting Bar	25
5.6	Dualski base	27
5.7	Öhlins shock absorber with « Quickset » system	29
5.8	Öhlins SX shock absorber	30
5.9	Öhlins PRC shock absorber	30
5.10	Outriggers	31
6	**MAINTENANCE**	**33**
7	**DELIVERING AND TRANSPORTING**	**34**
8	**RECYCLING**	**34**
9	**CLEANING AND DISINFECTION**	**34**
10	**WARRANTY**	**35**
10.1	Warranty Terms	35
10.2	Warranty exclusions	35
10.3	Coverage Terms	35
11	**VERTICAL EVACUATION OF TESSIER™SITSKI EQUIPMENT**	**36**

1 GENERALITIES

1.1 Information related to this manual

This Instruction and Maintenance manual owns all the important information about the use of your TESSIER™product. In order to use it in the safe way and enjoy all of its performances, please read carefully this manual and pay attention to the security advises and maintenance advises.
If you have visual disturbance or for any other reason, you can ask us the pdf version of the manual and zoom it according to your convenience.

1.2 Symbols in this manual

	**WARNING** Indicates a potentially hazardous situation that could result in serious injury if you do not respect the security checks mentioned.
	**CAUTION** Indicates a potentially hazardous situation that could result in minor or slight injury if you do not respect the security checks mentioned.
	**IMPORTANT** Indicates a potentially hazardous situation that could result in damage of equipment if you do not respect the security checks mentioned.
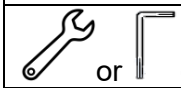  (b)	MOUNTING AND SETTINGS INDICATIONS Indicates the key size (a) And the value of the torque – Nm (b) to correctly tighten the screws.
	GOOD MANIPULATION Indicates the processes to follow in order to operate correctly the manipulation.
	BAD MANIPULATION Indicates the processes not to follow, shows the wrong way to do the manipulation.

1.3 Labelling

A sticker and an inox plate are fixed on your Tempo™

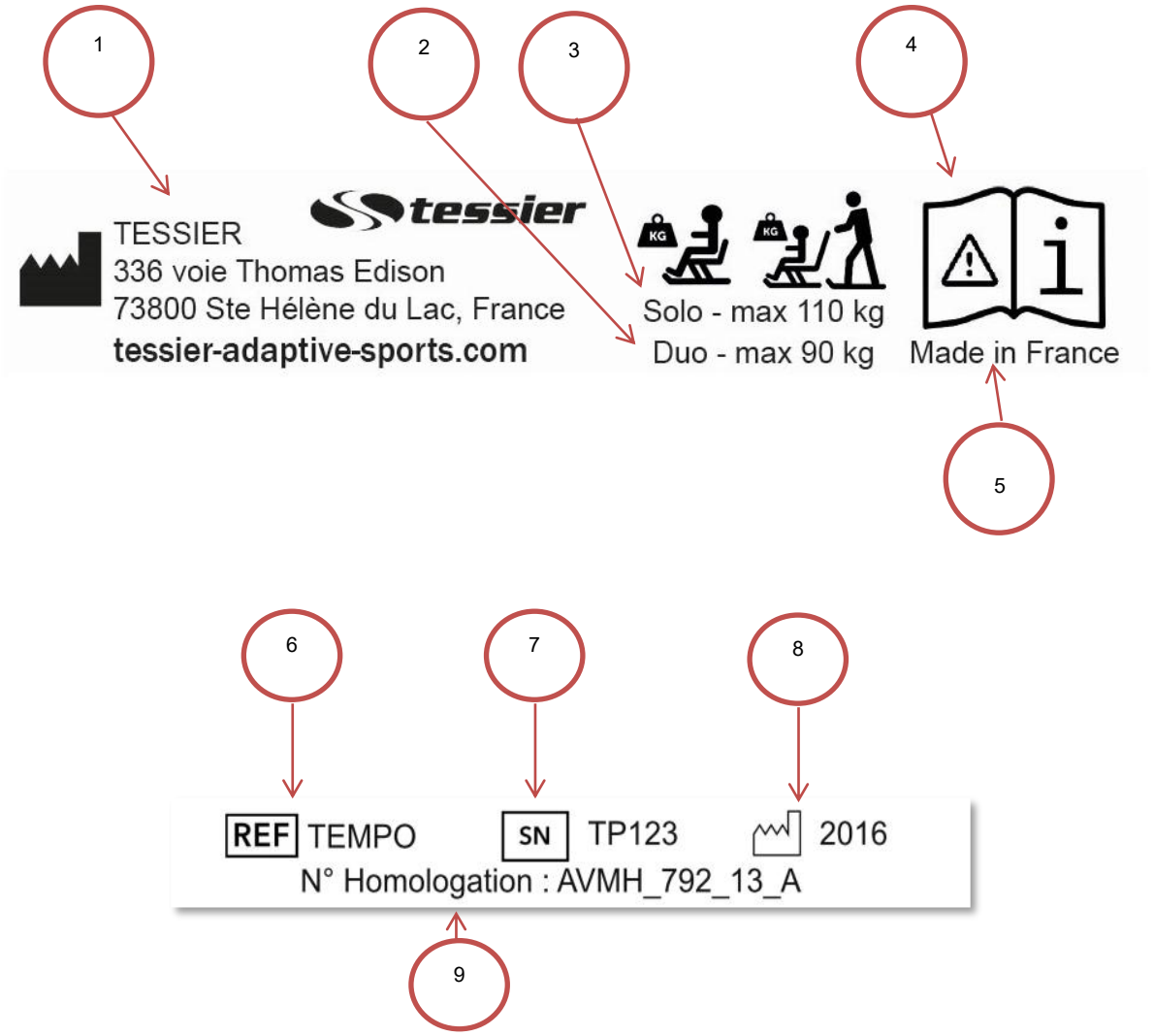

Référence	Désignation	Observations / Explications
1	Manufacturer	Complete name and address of the manufacturer
2	Maximal weight of the sitskier, DUO use	Weight (in kg) of the sitskier.
3	Maximal weight of the sitskier, SOLO use	Weight (in kg) of the sitskier.
4	Manual	Refer to the manual to get all the information in order to use correctly your product.
5	Made in France	Country of production
6	Reference	Product reference for the manufacturer
7	Serial Number	Identification of the product via its serial number
8	Year of production	Year of production of the product
9	Homologation	Homologation number from STRMTG (see chapter 3)

1.4 Intented use

- The TEMPO™ is a ski frame dedicated to a SOLO use (autonomous, that means the user skies alone and uses a pair of outrigger to keep his balance) or a DUO use (with an accompanying pilot).

- The TEMPO™ is configurable and can be affected by accessories which allow adjusting the position and the comfort of the user. The adjustments and the options are described later in this manual.

- The TEMPO™ has been designed in order to ski on marked slopes or off-piste accompanied by a qualified mountain professional and to take the ski lifts according to the homologation notice delivered by the “Service Technique des Remontées Mécaniques et des Transports Guidés” (STRMTG), division of the French Ministry of Transport, Equipment, Tourism and Sea.

- For a SOLO use, the TEMPO™ must be used after a formation by a competent sitski instructor and aware of the procedure to take the lifts.

- For a DUO use, the TEMPO™ must be used after the pilot has received a formation by a competent sitski instructor and aware of the procedure to take the lifts, preferably an official TESSIER partner.

- TESSIER™products can be used on a temperature range of -20 to +35 °C. When use the equipment outside this range, pay closer attention to the elements during the check-up phase.

- Anyone using TESSIER™products must be properly supported in the seat. Our 7 sizes (children and size 1 to 6) cover most morphologies. The minimal recommended age is 5 years old for the passenger, 16 years old for the pilot in DUO, and 10 years old in SOLO, provided that the child is comfortably installed in the seat while being well supported.

- Skiing and mountaineering environment in general can be potentially dangerous. Be sure to master and control your TEMPO™, responsible of your speed and aware of the risks you take. Respect the security notices, the specific ski resort regulation and the general mountaineering laws.

2 PRESENTATION AND INSTRUCTION OF USE

2.1 Presentation

The TEMPO™ has been commercialized as the 2013-2014 season in France and 2014-2015 worldwide. Versatile, it offers numerous solutions for independent skiing (Solo) or piloted skiing (Duo). It's available in Uniski, Dualski, with or without assistance or piloting bar. It can be used with TESSIER™seats of all sizes, the bucket articulated seat or the "Grand Confort" bucket seat (same as the one on the TANDEM'FLEX®). The TEMPO™ is a sitski easy to use for beginners but it also offers great performances for very good skiers thanks to its suspension kinematic close to those of the SCARVER®. Two gas jacks helping to lift it up and the high position well balanced make the chairlift use very easy.

- ***The different configurations for a use with pilot, « TEMPO™ DUO »***

➢ Tempo Dualski frame



➢ Shock absorber

Öhlins + ***Quickset*** System (easy setting)



➢ Removable piloting bar





TEMPO™ Duo with « Grand Confort » bucket seat and « Relax » footrest

➢ Seat – 3 choices

Articulated Seat all sizes (from Child To size 6)



Articulated Bucket seat



Grand Confort Bucket seat



➢ Footrest – 2 choices

Active
Adjustable in length, advised for « Solo » use



Relax
Ideal for « Duo » use
good protection of feet



➢ Option – Locking mechanism in chairlift position

It's an option to facilitate the holding of the chairlift position
The locking is activated by the pilot thanks to a rope.



***The different configurations for an independent use*, « TEMPO™ SOLO »**

- Frame



TEMPO™
Uniski or Dualski

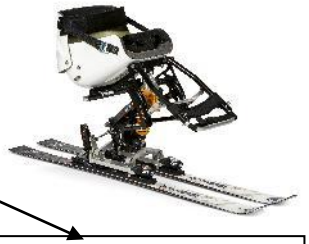

- Shock absorber

Öhlins PRC
Hydraulic settings in compression and rebound

Advised for a personal use



Öhlins SX
Quality of the PRC without adjustments.

Advised for a personal use



Öhlins + ***Quickset*** System

Advised for a collective use



- Seat



eat all sizes (from Child to size 6)

Removable assistance bar



TEMPO ACCESS



A new version has been available since the 2018/2019 season: the **Tempo Access**.
The Tempo Access is similar to the Tempo Uniski, but the shock absorber has been replaced by a silent block shock absorber to allow the rider to sit as low as possible. It is the lowest, most stable and easiest-to-use Uniski on the market. It is designed for children, beginners and people with limited balance.

2.2 Recommandations

- The performance and security of the TEMPO™ depend on its condition. It is thus important to look after it correctly and pay attention to the following points:

- Pay attention to your equipment and be attentive to any dysfunction to remedy it quickly.
- Respect the original assembly of the parts during reparation. If needed, do not hesitate to contact us.
- Check your skis condition and make them check by a professional if needed.

➢ <u>The skier's safety depends on his/her training level, his/her caution and his/her protection. It is therefore important to respect these different points:</u>

- For a "SOLO" use, do not start alone; learn with an association, a specialized club or an instructor specifically trained to sit skiing.
- For a "DUO" use, it is strongly recommended that the pilot follow a specific formation with a certified TESSIER™partner (see chapter 2.3).
- Keep a safety margin to always control your speed and your trajectory and avoid collapsing with other slope users.
- Stay focused when using the ski lifts.
- Wearing a helmet is mandatory for both sitskier and "pilot".
- Respect the 10 FIS rules of skier behavior (available online).

➢ <u>To limit the risks related to skiing, it is also necessary to respect the following advises:</u>

- In SOLO use: sufficient functionality of your upper limbs is required in order to be able to ski independently. A contraindication is applicable concerning people with cognitive troubles, shoulder troubles or back troubles. The upper limbs' condition must be good enough not to limit the skier in his/her movements.
- In DUO use: Skiing is not recommended for people having a medical contraindication related to bones fragility, altitude (respiratory troubles), sun exposure and/or cold. The pilot of the DUO equipment must be sportsman and in a good health not to be limited in piloting the sitskier.
- In order to avoid any irritation, users ensure to wear appropriate clothing to avoid direct contact with the equipment. Skiers must wear mountain shoes or boots to protect them against cold and shocks. This is particularly important for people who do not have the sensitivity of all their limbs.
- During the transfer phase to get in your seat, always be sure to be on a flat ground and assisted by one or more helpers: the frame is not designed to be stable in all circumstances.

This manual is not intended to teach you how to ski with your TEMPO™, but to understand the functioning, the settings and the maintenance of your equipment.

2.3 The TEMPO™ Duo Pilot training

TESSIER strongly recommend the pilot to follow a specific training for the “TEMPO™ Duo”.
The goals of this training are:

- To know how to adjust the equipment and comfortably install the sitskier.
- To ski and use ski lifts in complete safety.
- To be able to give a maximum of pleasure and autonomy to the sitskier according to his/her ability.

Trainers partners with TESSIER can deliver an accreditation card for the use of the Piloted DUALSKI® or TEMPO™ Duo (if the level is validated). This accreditation allows the identification of the trained pilots.
Note that the training of the TEMPO™ Duo is similar to the Piloted DUALSKI® one. The accreditation card for one of them is valid for both. There are some differences between them but globally the use of the TEMPO™ is easier. For people trained on the Piloted DUALSKI® and who have never used the TEMPO™ Duo, a hand hold with another pilot with experience of the TEMPO™ Duo is necessary.
The TEMPO™ Duo is great equipment for sharing good sensations between the pilot and the sitskier. The pleasure is shared but the pilot must always keep in mind that the **pleasure**, the **comfort** and the **safety of the sitskier** are a priority.

A **tutorial video** showing how to use the Tempo Duo is available on this page:
https://www.tessier.sport/formations/piloter-le-tempo-duo-et-dualski-pilote/
This video is not a substitute for training supervised by a qualified instructor.

2.4 Choice of skis

Just as a standing skier, the choice of skis will depend of type of practice, the weight and the ski level of the skier.

- With the **Uniski / monoski** all the weight is evenly distributed over one single board. For this reason, it is advisable to use either top quality or competition skis that are designed to support significant mechanical constraints. This choice means that the Uniski can work effectively and will increase the lifespan of the ski compared to one of an inferior quality. Just like for an able-bodied person, this will depend on the type of ski used and also the weight and ability of the skier. Experience has shown us that it is necessary to use a ski with an identical size to the one used by an able-bodied skier of the same weight and ability. For beginners or intermediate skiers, choose a pretty soft ski (looking like a racing one but not a World Cup ski).
- With a **Dualski** (Solo), the weight is distributed on both skis. Our own experience has shown us that it is necessary to use skis that are approximately 10 cm shorter in relation to an able-bodied person of the same weight and ability. For leisure use, medium range skis are sufficient and are often more efficient than competition skis “too stiff” on which a “Dualskier” could hardly put enough pressure to use their potential.
- With a **Tempo Duo** (with a pilot) we recommend for both the sitski and the pilot the use of skis between 135 and 155 cm.

In uniski and Dualski, a rigorous sharpening of the edges of the ski is indispensable, especially on hard snow.

Important	**IMPORTANT** It is important to control your skis before each ride and to make them carried on properly by a competent professional.

2.5 Choice of bindings

The binding choice depends on the skier's weight and ability. The binding used must not take off the skis. For all applications, the maximum release force is recommended.

- With the **Uniski / monoski**, the stress on the binding is high. We recommend a binding with a minimum setting of 18 DIN (pivot) or 20 DIN (standard), depending on the model.
- With the **Dualski**, the stress is distributed over the 2 bindings. You can therefore choose:
o **"Solo" use** (autonomous).
"Pivot" type bindings with a minimum setting of 14 DIN.
Pair of "standard" bindings with a minimum setting of 16 DIN.
o **"Duo" use** (with a pilot).
"Pivot" type bindings with a minimum setting of 12 DIN.
Pair of "standard" bindings with a minimum setting of 14 DIN.

- « Pivot » bindings
(Rossignol Axial, or Look PX or Look Pivot for example)

- « Standard » bindings



Avertissement	**WARNING** It is mandatory to use bindings which are resistant enough, adjusted to the maximum and correctly set by a professional.

2.6 Mounting of the binding onto the ski

The foot piece fitting the skis is **325 mm** in length.
Mounting is usually the same as for a ski boots of an identical length: the middle of the foot piece must be aligned with the marker of the ski.
The anti-sliding ear avoids a front unfix. If the anti-sliding ear is too narrow, it is possible to modify bindings or to use a larger one. Please contact us in this case.

Attention	**CAUTION** We recommend not to take off the anti-sliding ear and to contact us if it does not fit to your bindings.

3 USE OF CHAIRLIFTS AND T-BAR LIFTS

The TEMPO™ has received the homologation notice n° AVMH_792_13_A for the use of chairlifts and draglifts. The “TESSIER” draglift system has received the homologation notice n° AVMH_734_99_C.
These authorizations are delivered by the « commission des matériels de ski assis » (committee for seated ski equipment) presided over by the STRMTG (division of the Ministry of Transport, Equipment, Tourism and Sea).
They are available on request.
Also, the French Handisport Federation has drawn up regulations for the practice of sitskiing.
The following practical advice does not replace the homologation notice.

	**WARNING** Never use a ski lift without authorization of its operator.

3.1 Drag lifts use

3.1.1 Ski lift harnesses description

Since 2012, TESSIER offer **3 types of ski lift harness**:

- The **« standard » ski lift harness** for draglifts with « plate ».
  It is also usable for draglifts with « T-bars ».
- The **« T-bar » ski lift harness**, easier, for bows.
  It is homologated in France only for bows and **is not allowed on draglifts with plates**.
- The **« T-bar + flange » ski lift harness** for all types of draglifts.

	**WARNING** A helper must be before the sitskier and stationed at the emergency stop button in the arrival area in the case of a malfunction of the ski lift harness. This is a condition for the homologation notice to be validated.

Using the ski lift harnesses

The concept is the same for the three harnesses:

- A **main release** of the harness: traction of the main rope releases the snap hook which release the flange or the strap (in function of the harness).
- A **safety release**: traction of the rope held on the other hand leads to the release of the harness. This release is used in case of failure of the main release, loose of the rope or any other case.
- Respect the general advising of the following pages.

Installing the ski lift harness on the TEMPO™

The fixation is the same for all types of harnesses.

1- Fix the 2 snap hook (1) to the fixing points on the frame (2). It is necessary to remove a snap hook to take place in the seat.

2- Take care that the rope (3) of the harness must always pass between the seat and the strap of the backrest (4).

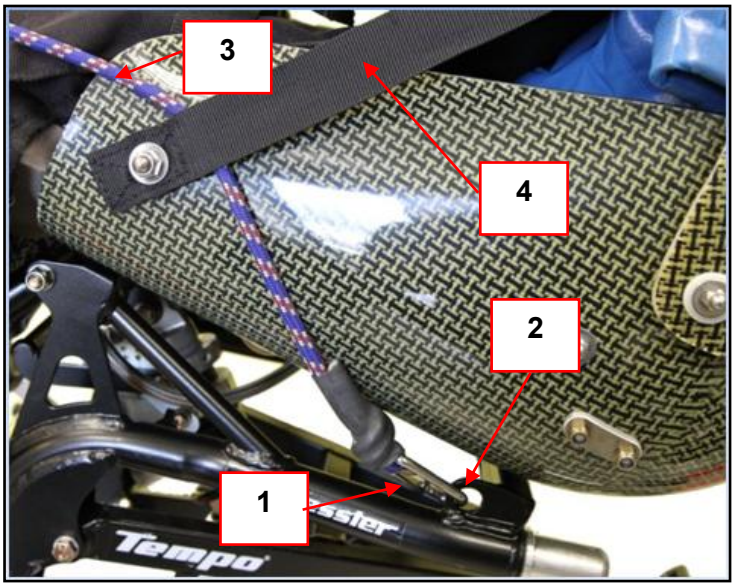

➢ Explanations with the descriptive on the following page

« Standard » ski lift harness

The main release rope (4) opens the flange (1) and releases the seat of the pole. It should not be attached to the hand but simply held between the hand and the handle of the outrigger because it goes with the flange when releasing the safety snap hook.
The safety snap hook rope (5) must be passed around the wrist and held on the handle of the outrigger as a strap.

Flange + T-bar ski lift harness

The use is similar to the « standard » harness.
The main release rope (4) opens the flange (1) and releases the seat of the pole. It must not be attached to the hand but simply held between the hand and the handle of the outrigger because it goes with the flange when releasing the safety snap hook.
The safety snap hook rope (5) is used in this configuration as a security release. In this case, one of the ropes is not used, and must be stowed on the side of the seat. In the case of a release, the hook of the rope will go through the hanging hook (1C) of the flange. (see photo on the right).



T-bar ski lift harness

The rope (2) goes from any side of the T-bar, closer to the pole. The releasing ropes are held as poles straps on each hand (5) (6). The other rope is used as security release.

Standard harness

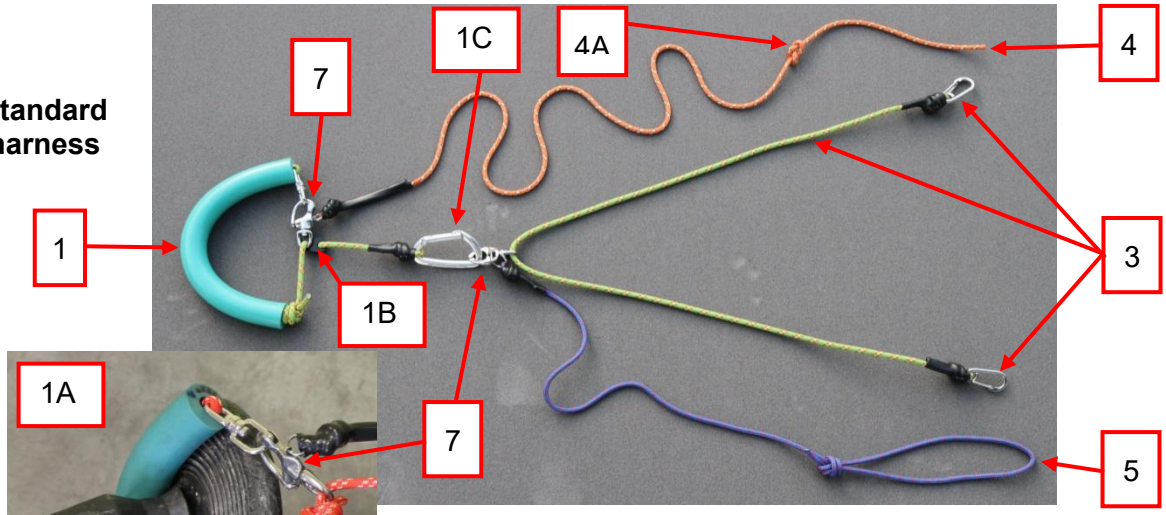

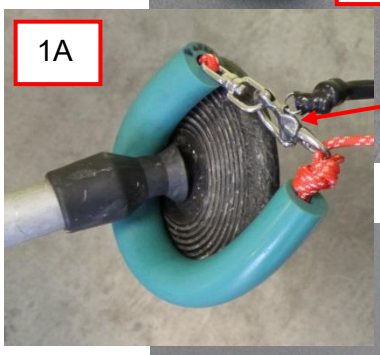

Flange + T-bar harness

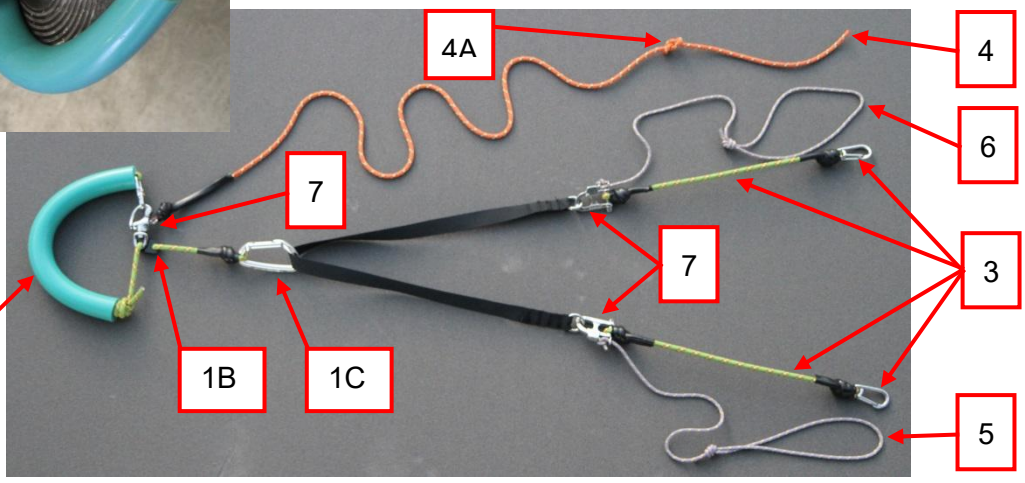

T-bar harness

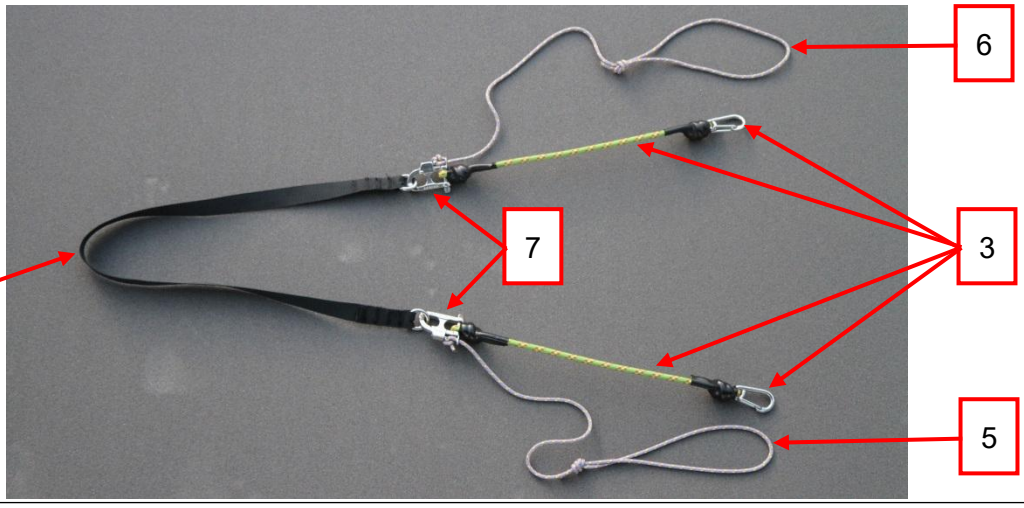

1 – Flange (rubber part). The « slipknot » allows a good maintain on the skilifts pole. **1A** – illustration with « slipknot » tighten on the plate. **1B** – Plastic adjuster for the opening of the flange. **1C** – Hanging hook of the flange.
2 – Rope for easy and efficient hanging on the chairlifts with T-bars. **Do not use with plates**. The flange can be added to this rope (flange + T-bar harness).
3 – Snap hook and rope to attach the harness to the frame.
4 – Main release string. **4A** – knot, must be under the hand when holding the string.
5 – Safety release rope. Hold it by the buckle on the handle as a ski pole strap.
6 – Main release rope for the T-bar harness. **For the flange + T-bar harness,** the rope (**6**) is not used and must be hidden between the legs.
7 – Release karabiner and security release karabiner.

➢ DUO ski lift harness



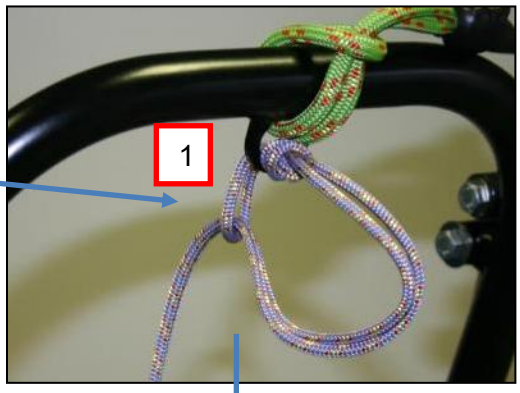



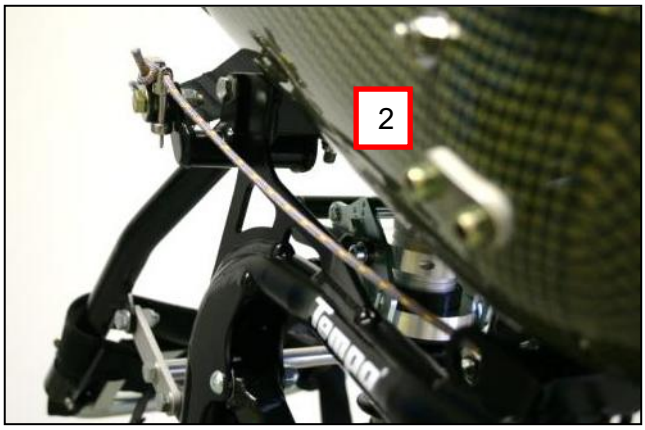

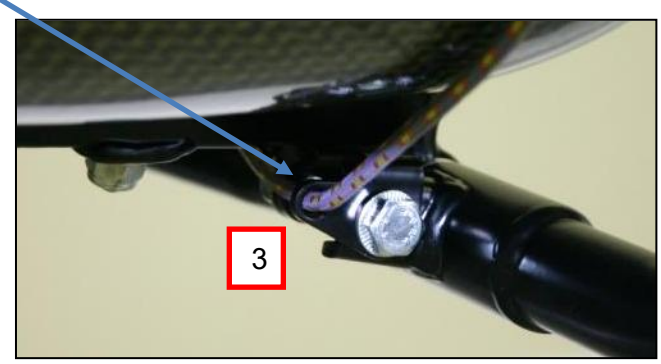

The functioning is the same as on a standard harness. The release rope (1) is tied to the safety line hook. The rope goes through the supports of the piloting bar (2). In order to release the harness, you have to pull on one of both ropes to open the snap hook, which will unleash the rope tied to the T-bar. As for a standard harness, one of the ropes is used as the main release rope and the second one is used as a security rope.

Attention	**CAUTION** Refer to chapter 3.1 to know how to use the harness. The same advises as a SOLO use are applicable.

3.1.2 How to use the skilifts

- **General Case** :

- The skier must have in his/her possession the identification sheet of the ski lift harness system with specifications in order to be able to attest its conformity.
- It is **mandatory that a helper leaves first and is at the emergency button at the arrival area of the ski lift**, in the event of a malfunction of the harness system. This is a condition for the certification notice to be validated.

- **For « standard » harness or « flange + T-bar » harness:**

- The sitskier **must prepare his/her harness before arriving in front of the lift operator**. The flange must be closed. A plastic adjuster is used to set the flange. It must be as closed as possible and just let the plate of the skilift goes through.
- The lift operator must use the manual starting mode or stop the skilift if it is not able to go slowly.
- He inserts the plate through the flange.
- When starting, the **lift operator must place the flange on the plate and maintain the plate on the front of the flange.** This will allow a good functioning of the slipknot of the harness.
- On ski lifts equipped with a T-bar instead of the plate, pass the flange on one or the other side of the T-bar and place it near the center of the pole.
- The rope of the release karabiner must not be tightening to the hand but simply held between the hand and the handle of the outrigger because it goes out the flange in case of releasing the safety karabiner.
- The rope of the safety karabiner must go around the wrist and held on the handle of the outrigger, as a simple ski pole strap.
- With the harness « flange + T-bar », there are 2 security ropes, one is not used and must be stored between the legs or inside the leg cover.
- When arriving, the sitskier releases the harness by the main release (opening the flange) as soon as he gets into the unloading area and leaves as fast as possible to be safe and store his harness.

- **For « T-bar » harness:**

- The flange is not used; the rope is enough.
- The sitskier must **prepare his harness before arriving in front of the lift operator**.
- The 2 release ropes of each karabiner must go around the wrists and held on the handles of the outriggers, as ski poles straps.
- It is not necessary to stop the ski lift, the operator must place the rope on one or the other sides of the T-bar and place it near the center of the pole.
- When arriving, the sitskier releases his harness by one of the two ropes as soon as he gets in the arriving area and leaves it as fast as possible to store his harness.

3.2 Chairlifts use

The following directions for use are not a substitute for the certification notice:

- Before taking the chairlift, **inform the chairlift operators of your presence**. They will be vigilant and will use the emergency button in the event of an incident.

- Systematically ask to get on at a slow speed, even requesting that it stops if the chairlift only has 2 places or is unable to go slowly. The speed for unloading the chairlift mustn't be higher than the speed for loading.

- The pilot can choose whether or not to remain connected by the lifeline to the frame. (In the case of a vertical evacuation, it is imperative to release himself).

3.2.1 Lifting and maintaining in high position for chairlift

- **In Solo**, unlock the frame so as to be able to put it in its high position. Push up vertically with outriggers and then lean forward in order to find a balanced position to wait the chairlift without any effort. Thanks to the gas jacks, the lift up is very easy.





- **In Duo,** after having folded down the piloting bar, lift up the Tempo holding the horizontal bar located on the rear of the bar and tip over the Tempo forward. To maintain the Tempo, push slightly forward and upward on the piloting bar.

If the TEMPO™ Duo is equipped with the locking mechanism.

Once it's at maximum high, pull the rope which locks in high position and let the frame goes down on the locking system. Release the rope. The total weight blocks safely the TEMPO™. To unlock and sit the TEMPO™ on the lift, pull slightly forward the piloting bar.
A spring keeps constantly the locking system in unlock position. If you have to move the TEMPO™ in high position, keep pulling the rope to do not make it go down.



Attention	**CAUTION** Release the locking system before sitting the TEMPO™ on the chairlift to avoid a high position loading.

3.2.2 Solo loading and unloading

- Before getting ready to load, **unlock the frame and loosen the TEMPO's backrest** adjustment strap in order that the seat is comfortable and safe.

Avertissement	**WARNING** Forgetting one of those 2 steps can lead to harmful situation. Absolutely check before going in the embarkation area: • The frame must be unlocked. • The backrest adjustment strap must be loosen.

- To get in the seat, place yourself as indicated:
  - For a chairlift with 2 places: on one of the 2 places.
  - For a chairlift with 3 places: on the middle place.
  - For a chairlift with 4 places or more: on one of the middle places. The footrest bars of the restraining bar are mainly positioned every 2 places. In any case, do not positioned the Dualski between 2 places where the footrests of the restraining bar are likely to obstruct. This should be imperatively entirely folded down.

- **Lift the TEMPO™**. At the contact of the chairlift seat with the TEMPO™, lean backward to seat down; hold the chairlift's backrest with the elbow until the restraining bar is totally fold down. **Fold down the safety bar as soon as possible.**





- Once the restraining bar totally folds down, push yourself back to the bottom of the seat by making a right-left translation movement, helping sliding easily on the seat of the chairlift.

Avertissement	**WARNING** Always make sure that your TEMPO™ is seated as far back as possible on the chairlift seat.

- Before arriving, check without lifting completely the restraining bar that nothing will disturb the opening of it.

- At the arrival, **hold the seat of the chairlift** (with elbow or arm behind the backrest) and **open the restraining bar at the last moment**. Unload with the help of someone if necessary and exit the arrival area.

- The blocks fixed to the outriggers (optional) help unloading the chairlift. They allow a good support on the seat of the chairlift to push forward in an efficient way.

- Do not forget to lock back the frame and tighten the backrest's adjustment strap before going onto the slopes.

	**CAUTION** Before going back to the slopes, check that: • The frame is locked • The adjustment strap of the backrest is tightened.

	**IMPORTANT** Control that there is not any part which could deteriorate the seats while using the chairlifts.

- During all these steps, do not hesitate to ask the help of an accompanying people.

3.2.3 Duo loading and unloading

- Before entering the loading area, **3 actions** are **indispensables:**
  - **Fold down the piloting bar**
  - **Unlock the frame**
  - **Loosen the backrest adjustment strap** in order that the seat is comfortable and safe.

	**WARNING** Forgetting one of those 3 steps can lead to harmful situation. Absolutely check before going on a loading area: • Piloting bar must be refolded. • Frame must be unlocked. • The backrest adjustment strap must be loosen.

- To get in the seat, place yourself as indicated:
  - For a chairlift with 2 places: on one of the 2 places.
  - For a chairlift with 3 places: on the middle place.
  - For a chairlift with 4 places or more: on one of the middle places. The footrest bars of the seat's safety rail are mainly positioned every 2 places. In any event, do not position the Dualski between 2 places where the footrests of the seat's safety rail are likely to obstruct. This should be imperatively entirely folded down.
- The **safety line** can be attached to the pilot or removed and enrolled on the bar of the TEMPO™. The rope must not fold over the frame, so as not to be gripped on the seat. If kept attached to the TEMPO™, think about removing it in case of vertical evacuation.
- Once at the right place, lift up the TEMPO™ being on the side. To hold it in high position, look details in chapter 3.2.1.
- The pilot must be forward of the TEMPO™ in order to sit it first before the



chairlift comes in contact with his legs, and then he sits himself.

- Once on the chairlift seat, **push the TEMPO™ as far back as possible**. To be efficient, catch it with a hand on the bar and hand in the front of the TEMPO™ seat and pull it backward doing a right-left translation movement to make it slide easier.

Avertissement	**WARNING** Be always sure that your TEMPO™ is installed to the maximum at the back of the seat of the chairlift.



- Hold the TEMPO™ against the chairlift backrest until the safety bar is closed. (See picture) **Close the safety bar as early as possible**



Unloading

- Before arrival area, check that the restraining bar can be open without obstruction without raising it completely.
- At the arrival, position yourself as close as possible to the TEMPO™, back leaning against the chairlift backrest, holding the TEMPO™ by the piloting bar with the elbow behind the backrest (as on the picture) and **lift up the safety bar at the last moment**.
- Unloading from the chairlift can be done at two different times according to your preferences and the specificities of each chairlift:
  - Either **as soon as ski(s) are in contact with the arrival table**. Just before ski(s) get in contact with the snow, exert an upward and forward effort on the piloting bar and hold the front of the seat with the other hand in order to push it straight. Making this effort early, before the ski tips touch the snow, will help keep the TEMPO™ in its upright position and make it easier to get out of the seat.
  - Or once the flat of the table is passed, when the arrival area begins to descend.
  - It is difficult to get out of the chairlift on the horizontal part of the arrival area.
- Once the TEMPO™ is outof the chairlift seat, let it go back down to the low position. Thanks to the shock absorber, there is no shock for the passenger.
- Stand up once the TEMPO™ is unloaded and drive it a bit further.
- Clear the unloading area as soon as possible. Before getting back on the slope, lock the frame, tighten the backrest adjustment strap and unfold the piloting bar, and the safety line back if you has been removed it for the ascent.

Attention	**CAUTION** Before going back on the slopes, check that**:** • Piloting bar must be refolded. • The frame is locked. • The seat angle rope must be tight.

Important	**IMPORTANT** Check that none of the parts is going over the frame under the seat so as not to deteriorate the chairlifts during using it.

4 GENERAL DESCRIPTION

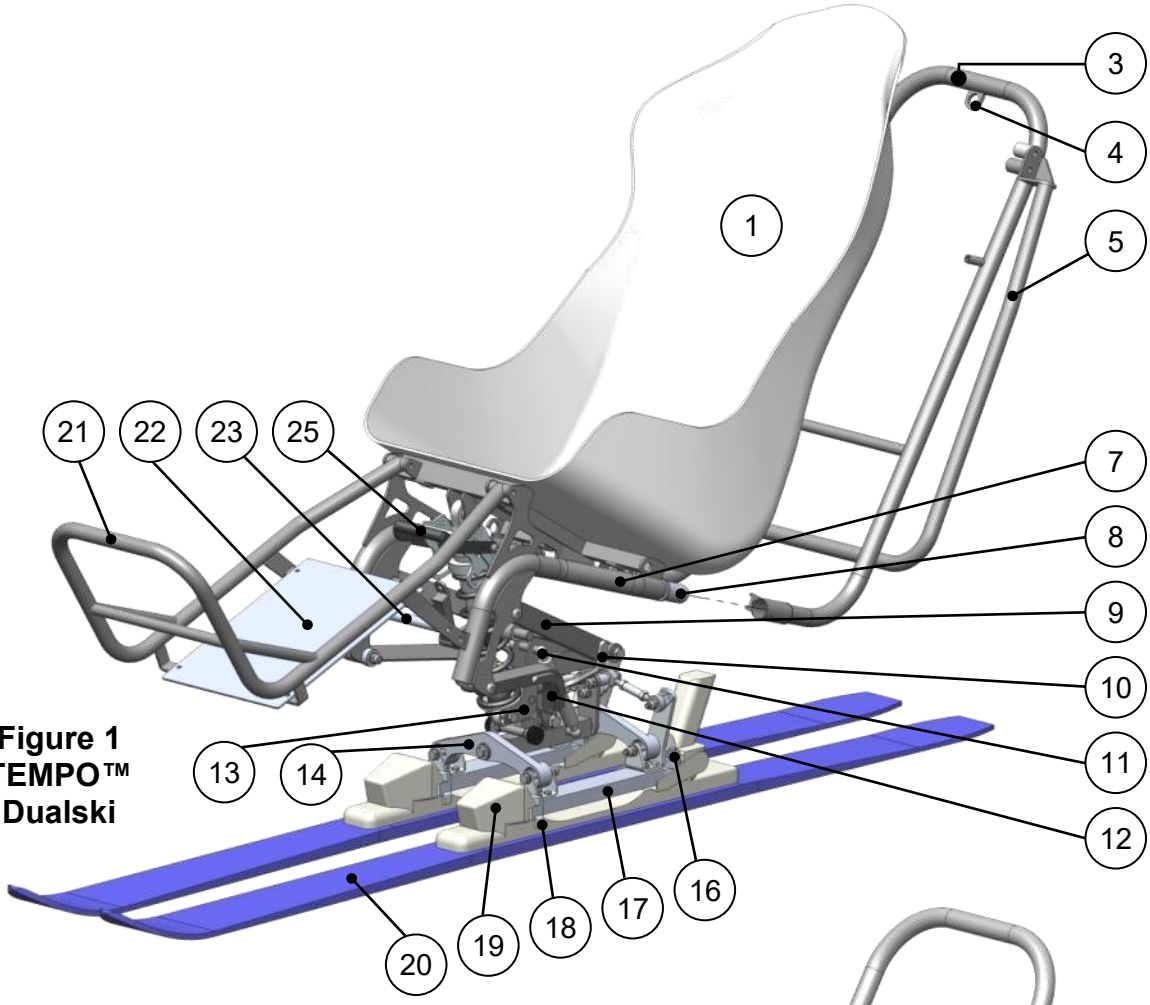

Figure 1
TEMPO™
Dualski

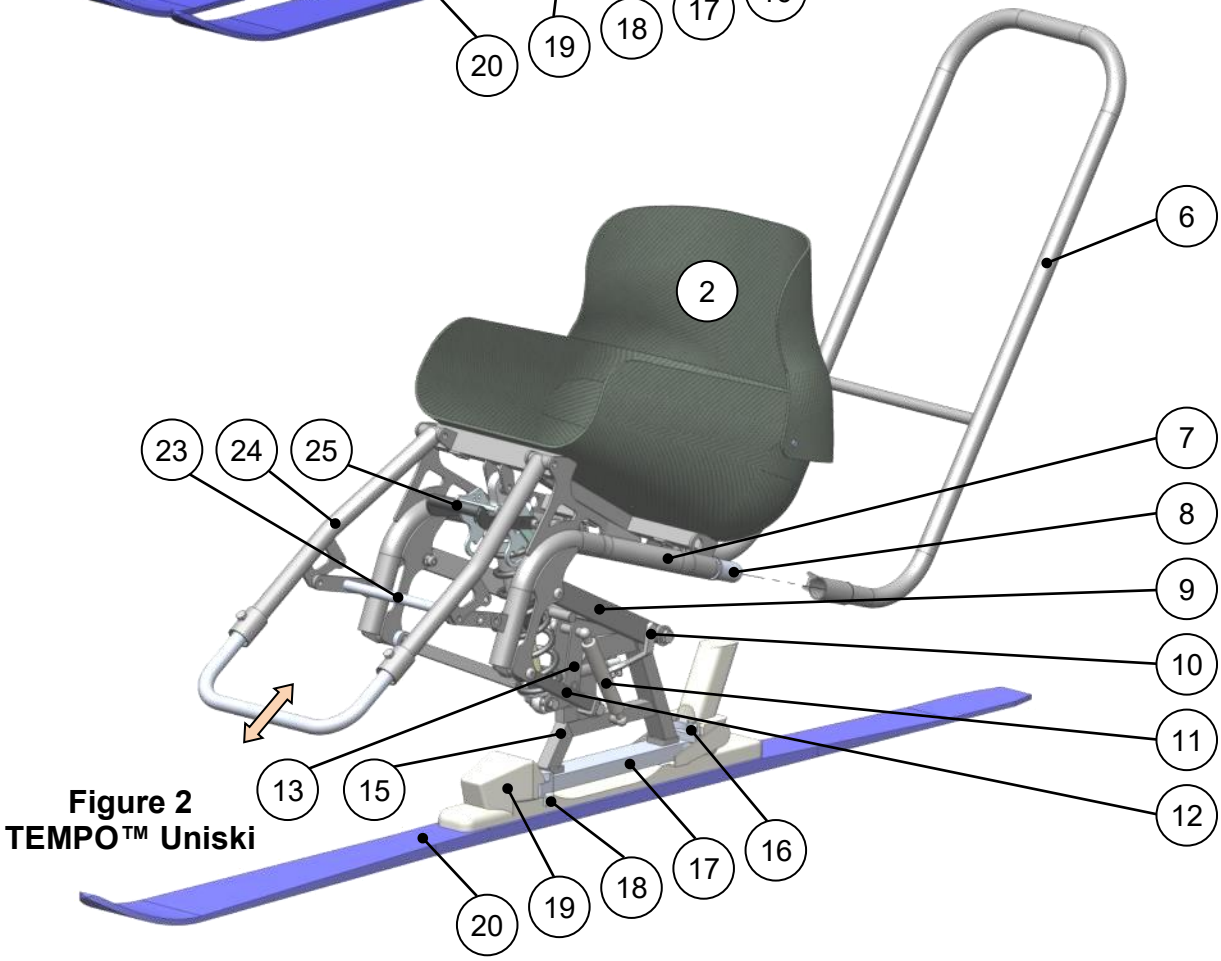

Figure 2
TEMPO™ Uniski

Nomenclature of the main pieces according to figures 1 et 2

Marker	Designation	Quantity
1	« Grand comfort » bucket seat	1
2	Articulated seat	1
3	Piloting bar	1
4	Safety line hook	1
5	Articulated part of the piloting bar	1
6	Assistance bar	1
7	High frame	1
8	Rear tenon of the high frame	2
9	Upper arm	1
10	Locking//Unlocking mechanism for the chairlift	1
11	Gas jack	2
12	Lower arm	2
13	Suspension tie rod	1
14	Dualski Base (**see details at chapter 5.6**)	1
15	Uniski Base	1
16	Foot piece additive	2 / Dualski, 1 / Uniski
17	Foot piece	2 / Dualski, 1 / Uniski
18	Anti-sliding ear	2 / Dualski, 1 / Uniski
19	Binding	2 / Dualski, 1 / Uniski
20	Ski	2 / Dualski, 1 / Uniski
21	Relax footrest	1
22	Aluminium plate of the relax footrest	1
23	Footrest strut	1
24	Active footrest (adjustable in height)	1
25	Shock absorber	1
26	High position locking tensioner	1
27	High position crutch	1
28	High position locking stop	2

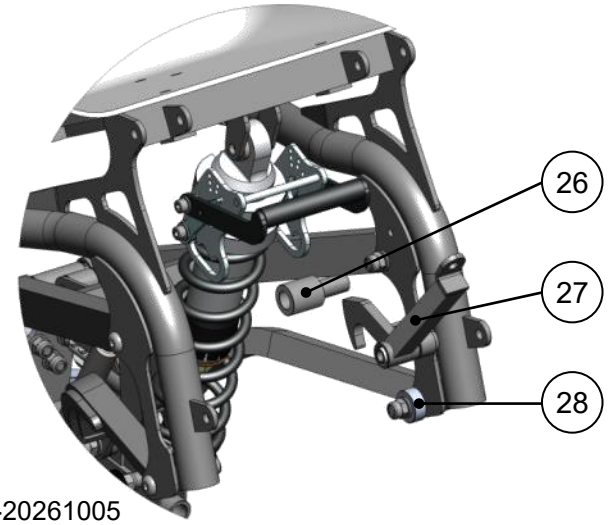

The locking mechanism (elements n°26/27/28) is available as an option.

5 TECHNICAL EXPLANATIONS, ADVICES AND AJUSTMENTS

5.1 Seats

On the TEMPO, it's possible to use 3 types of seat:

		
Articulated seat Child size to size 6 (7 sizes), different width and height of backrest for Solo or sometimes Duo if the sitskier has a good muscular tonus on his upper body.	**Articulated bucket seat** for Duo use. Available in one size. The backrest adjustment allows some sit skiers to be active.	**« Grand confort » seat,** for Duo use. Very comfortable cover and Bultex foam for optimal comfort.

- **Articulated seat and articulated bucket seat:**

These seats are upholstered with 2 types of foam:

- Water-resistant foam stuck around the sitting part and the backrest.
- At the bottom of the sitting part there is a removable and memory shape foam. It can be stiff when cold but softer with the body temperature and will take the shape of the body. It may be necessary to remove it to dry it.
- When sitting in, make sure to tie all straps, the hips strap has to be under the jacket to be efficient. For the articulated bucket, tighten first the horizontal straps and then the shoulder straps. Be sure that the seat foam is here and in a correct condition before seating the sitskier.

Mounting of seats on the frame. Tighten correctly (18Nm).

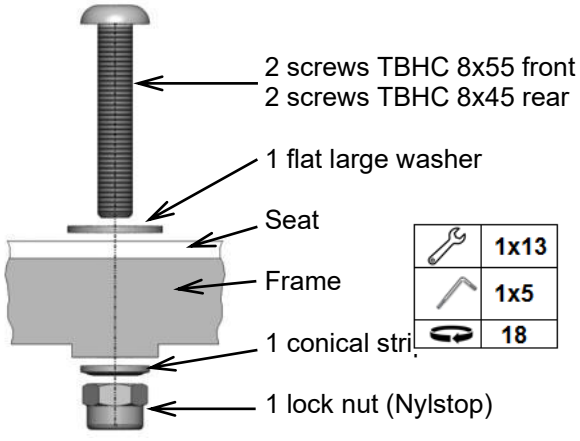

Attention	**CAUTION** When manipulating the articulated seats, do not put your fingers between the seat and the back, you could pinch your fingers.

Attention	**CAUTION** The seats are not fire resistant. In case of fire (incandescent cigarette butt for instance), get out of the seat as fast as possible.

- **« Grand confort » seat :**

The cover could be removed by unscrewing the 5 blind nuts with a size 10 key and releasing the 2 Velcro's straps.
To access to the screws to remove the seat (explanations on the right), remove the 2 blind nuts on the sides of the seat, remove the 2 Velcro straps and lift up the cover (see photos after).

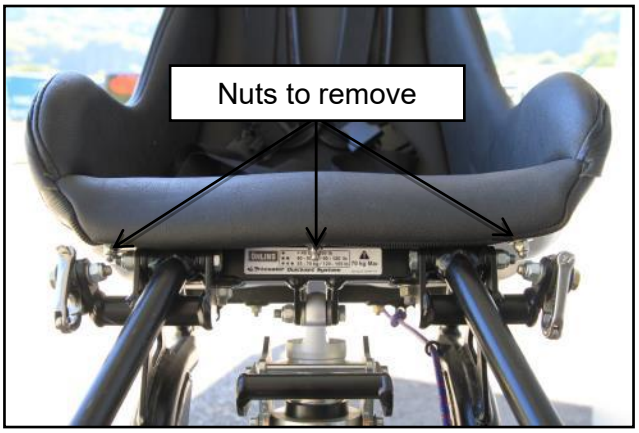

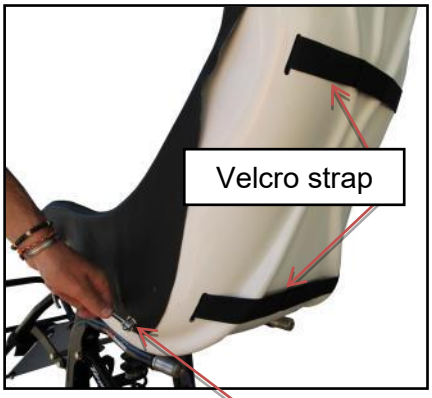

Nuts to remove (1 on each side)

To access the screws in order to take off the grand comfort bucket seat, unscrew the 2 blind nuts on each side of the seat, ungraph the 2 Velcro's at the rear and take the foam out.

5.2 Protection covers



➢ **Legs cover:** (Unique size)
Mostly used in Solo.
Easily fixed:
- In the centre, with 2 Velcro straps behind the footrest tubes.
- At the top by the seat knees strap.
- At the bottom the feet strap.



➢ **Warm UTY® cover:** (Unique size)
➢ Mostly used in Duo.
Install the warm cover on the TEMPO™ seat before the skier.
- Open the zip all along.
- Once the skier is installed, close the zip, put and tie the seat straps.
- Tighten the 2 cover's straps and lock the feet with the footrest strap over the warm cover.

Important	**IMPORTANT** To clean your leg cover, do not use solvant. Refer to chapter 9.

5.3 Footrests

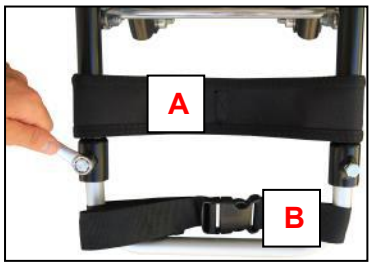

	13
	10

« Active » footrest:

1) **Height adjustment:** with a size 13 spanner, unscrew the 2 screws. By sliding the footrest, adjust the height to get 1 finger gap between the seat foam and the underside of the thigh at the front of the seat. Tighten correctly the 2 screws (10 Nm). Begin tightening by hand and finish by a quarter turn with the 13 spanner. The footrest can be slide out to 13 cm maximum between the end of the frame and the foot support surface.
2) **Feet depth adjustment:** Adjust the strap **(A)** to put the feet in their middle.
3) **Attaching the feet:** tighten the strap **(B)** over the feet and eventually over the warm cover.

« Relax » footrest: The removable strap **(C)** passes under the footrest tubes. Tighten this strap over the legs and over the warm cover if you use it.



5.4 Releasing of the locking mechanism

Pull the lever backward (1) and then downward (2) to release the mechanism to lift up the TEMPO™ into « chairlift » position.



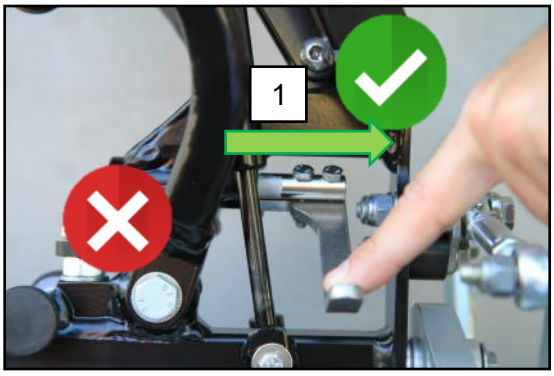

With the "external locking mechanism" option :

Push the lever inward with your right thumb in order to release the locking mechanism. Then pull out to relock.





With the Tempo Access:
Pull on the lever towards you (1) and turn it up (2) to release from ski position and rise up the TEMPO™ ACCESS in chairlift position.





Important	IMPORTANT To make it possible, it is important to have some weight in the seat because the jacks push up the TEMPO™ and block the locking system. It is sufficient to push on the seat to add some weight on it and unlock the system. In some conditions, the snow or the ice can bother the correct functioning of the mechanism. In this case just clean it.

5.5 Assistance and Piloting Bar

- The **assistance bar** on the TEMPO™ Uniski or Dualski is used to help the ski instructor during the learning phase.

- The articulated **piloting bar** is used to pilot the Dualski (TEMPO™ Duo) by a pilot-companion to help partially-dependent or dependent people to ski.



TEMPO™ Dualski with assistance bar

A return jack **(A)** pushes the bar in the unfolded position to provide a good grip for the pilot. The jack force is inversed when folding up the bar to maintain it closed. In high position an end stop avoids the bar to come on the sit skier.
If the sitskier is without outriggers, so dependent of the pilot, it is highly recommended to use the safety belt around the pilot and the rope **(B)** linked to the piloting bar when going down the slope. When taking the chairlift, the pilot can take it off. The safety belt and the leash are supplied with the piloting bar.



Avertissement	**WARNING** **Fold up the piloting bar before loading the chairlift.** If the bar is open it will be impossible to sit correctly the TEMPO™ and impossible to close the restraining bar on the lift.

The handling is easy for good skier but we strongly recommend to all pilots to do the special training with a TESSIER trainer partner. It allows a quick and safe evolution on slopes and for chairlifts. The pilot has to choose the slopes and the chairlifts in function of his level, his strength and the passenger weight.
The optional bars have been designed to use the Uniski or Dualski without changing their balance on the seat on the chairlift and to use normally the safety guard.
These optional bars are fixed to the frame with two screws as indicated below:



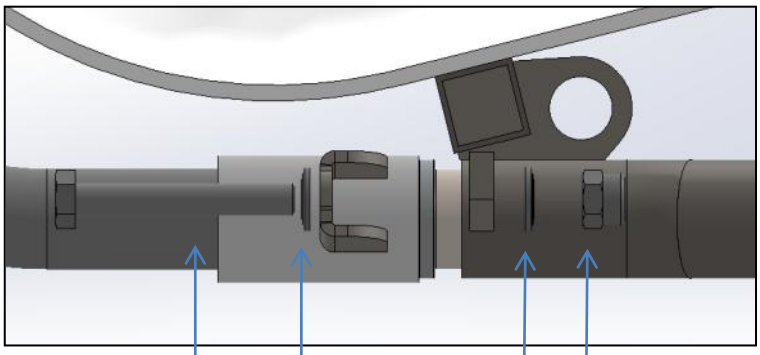

	2x13
	15

Screw kit on each side:
1 Screw TH 8x60
2 Striped conical washers
1 Nut lock (Nylstop)





Important	**IMPORTANT** Never push the TEMPO™ Duo by the upper part of the unfolded bar, pushed against the fixed part.

Pushing on the unfolded bar like shown on the right picture would make an important pressure and could spoil it. A twisted bar in this condition will not be under warranty.

Attention	**CAUTION** Do not put your fingers between the stop of the piloting bar, where there is the sticker, when manipulating the piloting bar. You could pinch your hand.



5.6 Dualski base

5.6.1 Nomenclature

Repère	Désignation	Quantité
1	Upper arm	1
2	Lower arm	2
3	Gaz jack	2
4	High frame	1
5	Shock absorber	1
6	Suspension tie rod	1
7	Dualski base body	1
8	Front inclination buffer	2
9	Frame arms	2
10	Lateral foot piece	2
11	Anti-sliding ear	2
12	Front clevis mounting	2
13	Rear clevis mouning	2
14	Foot piece additive	2
15	Transmitter rod, each including : - 2 spherical plain bearing rod end D8 mm - 2 hex nut 8 - 1 tapped spacer	2
16	Rear inclination buffer	1
17	M8x40mm hex-headed screws	2
18	M8 HEICO-LOCK – wedge lock washers	2
19	Edge-adjustment plates	2
20	Lock nut D 8mm (To change the transmitter plates)	2

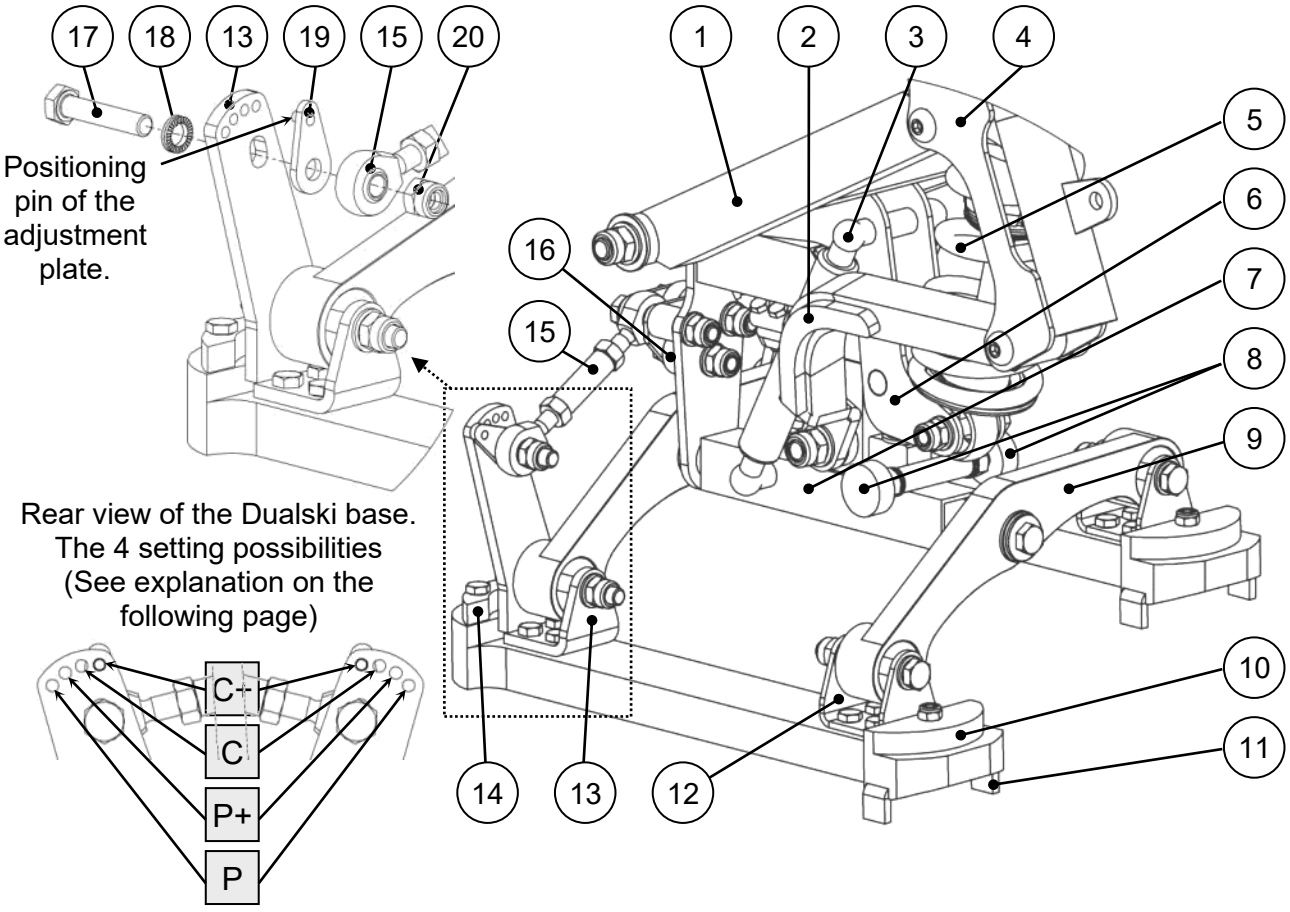

Rear view of the Dualski base. The 4 setting possibilities (See explanation on the following page)

Explanations regarding the drawings on the previous page

5.6.2 Explanations of the edging system

On the Dualski, the inclination angle of the skis is different from the inclination angle of the seat, depending on the chosen configuration: **P**, **P+**, **C** or **C+**.
These 4 configurations correspond to the 4 possible positions of the position pin of the edge-adjustment plates (**19**). For example, for the P configuration, the pins are positioned on the outer holes (**13**). It is essential to have the same settings on both sides.

Setting choice:

P = Performance. This is the setting where the inclinaison angle of the skis is the least important. With this setting, the Dualski is easier to ski while remaining performant.
Solo use: this configuration is advised for skiers with high injury or skiers looking for easier pivoting or slidding.
Duo use: this configuration is recommended. Only very good pilots will be able to use the **P+**.

C+ = Extreme carving. This configuration allows a very incisive edging and is reserved for very good skiers.
Solo use only: with this configuration it becomes more difficult to slide.

	**IMPORTANT** In Duo, configurations C and C+ are forbidden. In Solo, skiers will use different configurations depending on their ski level, and their disability.

Whatever the chosen configuration, the edging is very important.
The maximum edging angles of the different configurations are:

P = 54,5° P+ = 56° C = 57,5° C+ = 59°

5.6.3 Changing the edging system configuration

	**IMPORTANT** Do not touch the setting on the transmitter rod (15) of the inclination system. This setting is precise to get a good functioning of the equipment.

It is recommended to replace one side first, then the other.

- Unscrew a few turns the “lock nut” of diameter 8 mm on point (**20**).
- Position the indicator of the edge-adjustment plates on the hole (**19**) corresponding to the chosen configuration according to figure on the previous page. Make sure there is no snow or ice between the two parts.
- Retighten properly the nut (with a dynamometric spanner, the clamping torque is 22 Nm). If the Nylon ring of the nut is damaged, it needs to be replaced.
- Make the same operation for the other side.

	**IMPORTANT** The clamping unit of the edge-adjustment plate is subjected to vibrations and considerable strains. It is essential to tighten the screw properly and to place the washer in its right location. These HEICO-LOCK washers limit the unclamping.

5.7 Öhlins shock absorber with « Quickset » system



Also used on the TANDEM'FLEX®, the Quickset system, developed by TESSIER, allows a very quick and easy setting of the shock absorber to different skier's weight without any tool.

Push on the preload lever (A) with the palm of the hand and at the same time, push or pull the hand lever (B) with your other hand. Once the position hand lever (B) is on one of the 3 positions, release the preload lever (A) and the hand lever (B), make sure to have the cursor (C) in front of the position marks, shown by holes. The top of the cursor must cover half of the lower hole. Choose the right position depending of the weight of the skier.

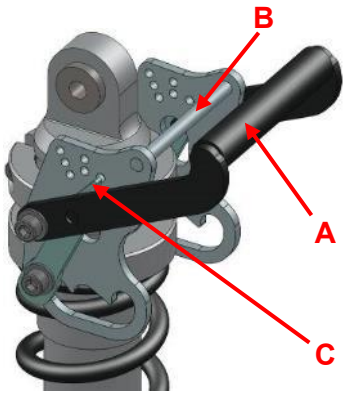		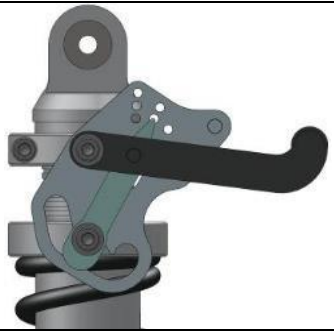	
	●	● ●	● ● ●
Black spring (by default) reference 00480-04B	*Up to 60 kg / 130 lbs*	*60 to 80 kg / 130 to180 lbs*	*From 80 kg / 180 lbs and more*
Yellow spring for lighter passengers (optional) reference 00480-11Y	*Up to 45 kg / 100 lbs*	*45 to 60 kg / 100 to 130 lbs*	*60 to 80 kg / 130 to 175 lbs*



IMPORTANT
The yellow spring must be used only with passengers whose weight is lower than 80 kg /180 lbs Also, it is important to adjust the notch according to the weight of the passenger. The TEMPO™ can be damaged if those recommendations are not respected.

Maintenance: Spray silicone or teflon based lubricant on the aluminium body every 60 hours of use.
This makes it easier for the polyethylene ring of the Quickset to slide when adjusting..



5.8 Öhlins SX shock absorber

Unlike the Öhlins PRC, the Öhlins SX has no hydraulic adjustment. Its hydraulic configuration is optimized for the widest possible use. The right spring should be selected for the application. However, it's possible to adjust the spring preload of 5 or 10mm, which will harden the shock absorber. This adjustment can be done with the 2 special spanners delivered with the TEMPO™. Hold the lower ring with a spanner and turn the upper one clockwise to increase the preload (to harden the shock absorber) and counterclockwise to decrease it.





5.9 Öhlins PRC shock absorber

In sitskiing, it's necessary to adapt the spring strength to the weight and the performance of the skier to have a quality suspension. We're offering a wide range of spring for Öhlins PRC.

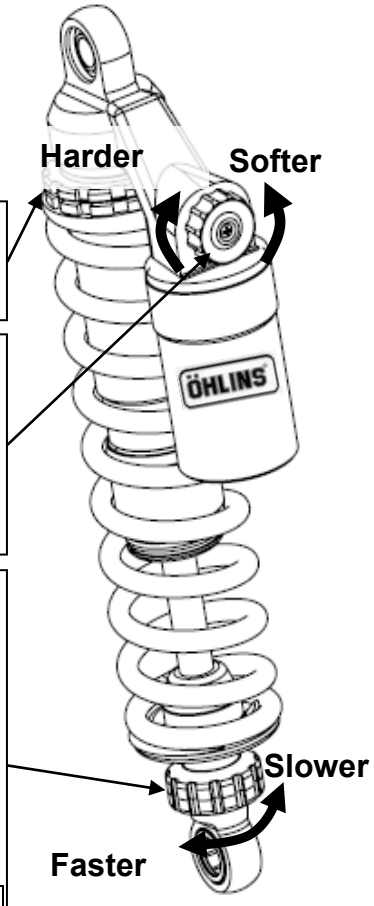

Spring preload

A preload of **15mm** is recommended for proper operation of the shock absorber. (factory settings).

Compression adjustment

Screw clockwise against the shock absorber to reach 0 and then unscrew the sdesire number of "click".

- 0 click: maximum closure, very hard
- **10 clicks: Average adjustment**
- 21 clics: maximum opening, very flexible.

Rebound adjustment

Screw clockwise against the shock absorber (seen from the top) to reach 0 and then unscrew from the required number of "click".

- 0 click: rebound closed, very slow return
- **15 clicks: Average adjustments**
- 25 clicks: Maximum opening, very fast return

(It is possible to open with more than 25 clicks but there is no longer any impact on the behavior. To avoid dismantle, do not open more than 25 clicks).

Attention	CAUTION The rebound value must always be superior or equal to the compression value in order to let the shock absorber uncoil on a succession of shocks.

Important	IMPORTANT If you had to change the spring, please contact us to get all the data necessary.

5.10 Outriggers



5.10.1 TRACER outriggers

Tools: All adjustments are done with 2 spanners of 10

It is indispensable to tight enough the screws. There mustn't be any play between 2 tubes. If your TRACER make some noise when you shake them, tight them more.

2- Ski tip angle adjustment

To begin, the angle must be adjusted to provide good support on the tail of the ski tip. Having a good support is reassuring for the sitskier and allows, among other things, the initiation of turns.
As the skier progresses, the angle of the stabilizers can be adjusted to reach a "gliding" position.



The position of the lower screw defines the angle of the ski.
For a **beginner**, we recommend the **hole n°2**.
Then we will move on to holes n°3 and then n°4. Other holes are rarely used.

To adjust the outrigger:

- Remove the lower screw.
- Slightly unscrew the upper screw (without removing it)
- Put back the lower screw in the chosen hole (by sliding the upper screw in the slotted hole if needed).
- Tighten both screws so there is no play.

3 - Outrigger length adjustment

The length adjustment must be done after the angle adjustment.
For a beginner, seated in a Uniski or a Dualski, the **skis flat on the ground**, the **elbows** must be **nearly as high as the shoulders**.







A good skier can, after having adjusted several times the angle of the skis, shorten his outriggers.

It is indispensable to tight enough the screws. There mustn't be any play between 2 tubes. If your TRACER makes some noise when you shake them, tight them more.

4 - Armrest adjustment
This adjustment is done less often but there are 3 positions for the length adjustment between the handle and the armrest.

5.10.2 Superlite outriggers



Tools: 2 spanners of 11 and an allen wrench of 4 for the last models

General instructions are the same as for TESSIER™outriggers.

1 - Adjustment of the ski angle



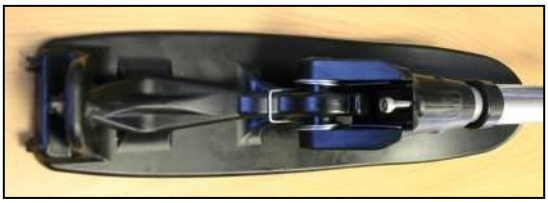

Screw or unscrew the stop screw (thanks to a spanner of 11) to change the angle. Check that both outriggers have the same angle.

2 - Adjustment of the length of the outrigger
- Release the string.
- Move the quick clip to the desired height.
- Tight the string.

3 - Blocks installation (optional)
Place the blocks just over the quick clip. Be careful, the blocks must be placed low enough so that the ski doesn't touch the ground when going off the chairlift.



4 - Armrests adjustment
Two spanners of 11 are needed.



6 MAINTENANCE

Our sitskis are known to be reliable and it is a priority for us to maintain a high level of reliability. The life span of TESSIER™products is 7 years provided that all maintenance instructions are followed.

However, as with any mechanical equipment, it's necessary to pay attention on it. especially since in our application, mechanics are sometimes subjected to extreme conditions. It is difficult to establish a precise maintenance plan because the frequency of use and the level of solicitation of the equipment are very different from one user to another.

However we recommend that you report or return to us the TEMPO™ :
- Every 500 hours for a normal use (beginners to good Solo skiers and TEMPO™ Duo use)
- Every 300 hours for an advanced Solo use (very good skiers, competitors, freeriders…)

If the return to our workshops is not possible, the maintenance or repair must be done by a professional mechanic.

We remain at your disposal to give you the necessary mechanical advices.

Between the above mentioned revisions, we recommend a regular maintenance of the TEMPO™ according to the board bellow.

Operation / *Frequency*	**Solution / Reparation**
Store the TEMPO™ in a dry place after each use.	
Visual check before each use or after an impact.	Contact us if there is a problem.
Check the skis and the bindings before each use.	Professional shop. If broken ski contact us
Check every articulation every 300 hours use or after an impact.	Contact us if there is a problem.
Check the frame and seat straps every 30 hours use or after an impact.	Contact us to before sending the straps.
Send the Öhlins shock absorber for a servicing (Contact us). The shock absorber must be exclusively be serviced by Öhlins France.	While servicing the TEMPO™ in our workshop or send it us back.
Dualski part, spray some silicone oil on each side of the four spherical plain bearing rod end D8. Depending the condition of uses, those parts might wear and get some little clearance. If the clearance becomes excessive, the spherical plain bearing rod ends have to be changed. The setting of the edging system has to be done again when we change those parts. In this case, contact us.	Every 30 hours use: 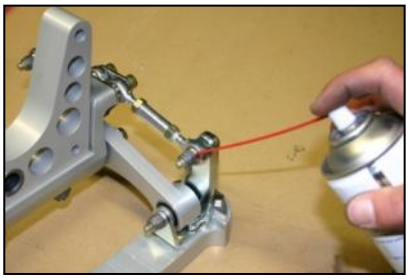
Quickset system, to facilitate the sliding of the polyethylene ring and make the setting easier spray some silicon or Teflon grease on the aluminium part.	Every 60 hours. Refert to chapter 5.7

7 DELIVERING AND TRANSPORTING

Your new TEMPO™ is either delivered to you fully assembled in our workshop or partially assembled in a cardboard packaging with bubble wrap.
To avoid damage during transport, all removable parts have been packed separately.

Unpacking after shipment by TESSIER :

	**IMPORTANT** Any claim regarding damage to equipment during transport can be considered if it has not been reported in writing to the deliverer.

- Check the packaging for signs of knocks.
- Remove the packaging.
- Carefully remove all the components of the TEMPO™ (seat, etc.) from their packaging and check that everything is there.
- Inspect all parts for signs of damage, tears, dents, bumps, deformation or other defects.
- If any part is damaged or missing, contact us immediately.

Casual transport by the user:
We recommend transporting the equipment without dismantling except for easily detachable skis.

	**CAUTION** In the case of transport with dismantled components, check before use that the assembly is correct and that the screws are tightened properly.

Storage:
After use, wipe the equipment with a cloth.
When not in use, it is recommended to store your frame in a dry place with a temperature above 0°C.

8 RECYCLING



This product has been delivered by an environmentally conscious manufacturer. Please protect the environment and recycle this product at the end of its life at your local recycling station.

9 CLEANING AND DISINFECTION

Do not use solvents. Clean only with a cloth or with water + neutral soap. Allow to dry naturally away from direct heat sources.
To disinfect textile products (foams, fabrics, etc...) use a disinfectant of the Sanytol type.

10 WARRANTY

10.1 Warranty Terms

At TESSIER, we pay special attention to the quality of our manufacturing and the reliability of our equipment. Our warranties take effect as of the date of purchase of the equipment.

Duration of Coverage:

- 5 years for all frames of our alpine ski equipment.
- 2 years for other products and mechanical and textile components (seats, straps, shock absorbers, cylinders, etc.).

Special Provisions for Racing cover: The Racing foot fairing is wear parts (consumable) subject to heavy stress. Except in the case of a proven manufacturing defect at the time of delivery, wear and tear resulting from use is considered normal and is not covered by this commercial warranty.

10.2 Warranty exclusions

To ensure your safety, our equipment must be used and maintained properly. The warranty does not apply in the following cases:

- Normal wear and tear of the product.
- Damage resulting from an accident, misuse, or negligence.
- Incorrect disassembly, reassembly, or maintenance performed by the customer.
- Installation of parts or accessories that are incompatible with or not intended for the original frame.
- Any modifications made to the frame or its components by the user.

10.3 Coverage Terms

This warranty is limited exclusively to the repair or replacement of the defective part. It constitutes the sole available remedy.

- Filing a Claim: Any request for warranty coverage must be submitted directly to TESSIER or an authorized dealer.
- Shipping Costs: If the equipment is returned for repair, the shipping costs (both ways) to the TESSIER factory or to the local distributor are the sole responsibility of the purchaser.

11 Vertical evacuation of TESSIER™ sitski equipment

Thanks to the different tests realized, a unique evacuation procedure for all sitski equipment homologated in France has been defined. It is approved by the French
Approval commission presided by the STRMTG.

Two anchor straps of 1m50 (example: anchor strap PETZL C40-150 or anchor strap BEAL BASIC 18mm length 150cm) are necessary.



The first strap shall be passed behind the backrest of the sitski and under the sitskier's arms, creating a point of attachment in front of the user.
The second strap shall be passed under the frame at the level of the skier's knees, passing in a part of the frame preventing the strap from sliding backward.
Both straps thus meet at a single point where the rope used for evacuation will be hooked in.

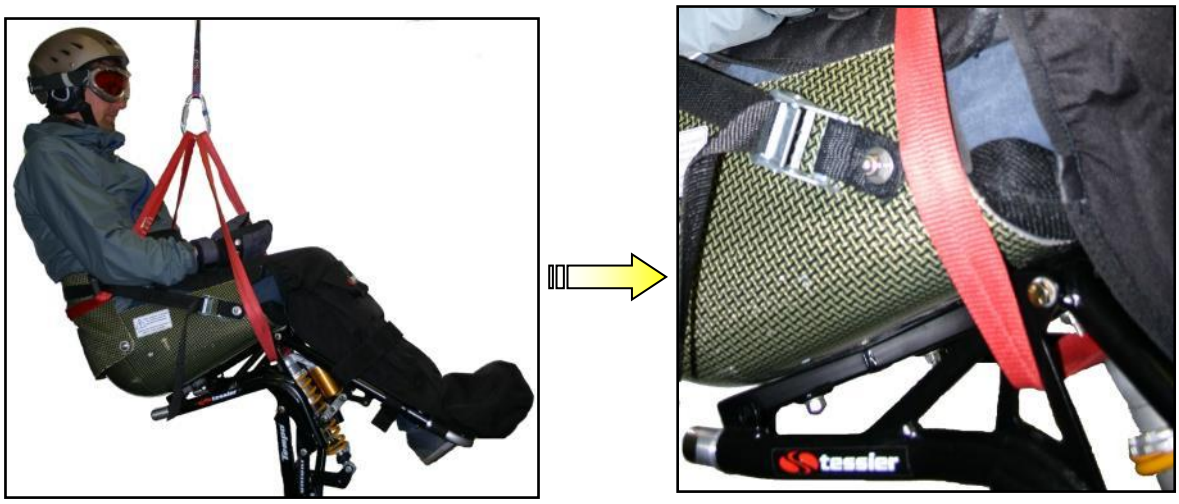

The evacuation triangle, usually used to evacuate people, can be then used to secure the accompanying person of the seated skier who can be active during the evacuation, also when the safety rail is open.
It is indispensable to secure the accompanying person before opening the safety rail.

In France, as in many European countries, the equipment used for evacuation is property of the ski patrols.
So skiers and first-aid workers have the guarantee to use equipment in perfect shape (stored in a bag to be protected from exterior aggressions, checked every year, with a defined lifetime and replaced when necessary).



For more information, please contact us.